TRAVAINI PUMPS USA

TRSC 100

Single Stage Medium Vacuum Pumps

PERFOMANCE DATA	: From 100 Torr	CAPACITY:	235 - 530 cfm
FEATURES	: Single-stage rotating pump with externally located bearings grease lubricated.		
SHAFT SEALING	: Mechanical seal - Double mechanical seal – Stuffing box.		
OPTIONS	: Bareshaft pump - Coupled to electric motor on baseplate - Monoblock with electric motor.		

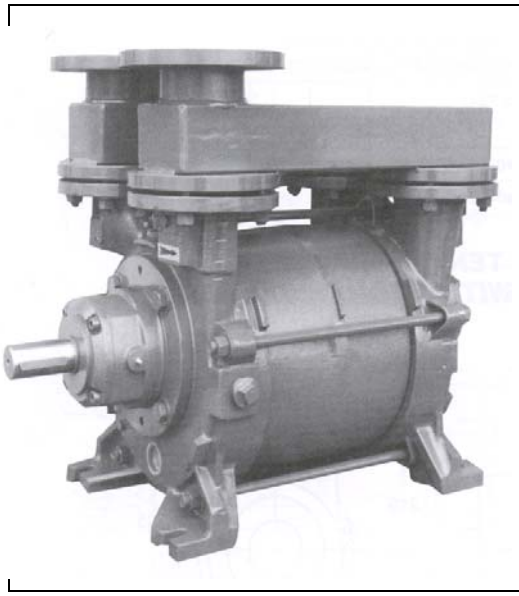

TECHNICAL DATA

PUMP TYPE		TRSC 100-550		TRSC 100-700	
Speed	RPM	1450	1750	1450	1750
Motor - installed power	HP	20	25	25	40
Average service liquid flow	GPM	10	10	10	10
Noise level at 150 Torr	dB(A)	76	78	76	78
Minimum suction pressure	Torr	90	90	90	90

Pumps are provided with threaded connections for service liquid, pump draining, grease and anticavitation valve and companion flanges. Pumps are also provided, by request, with auxiliary threaded connections, flanged air-liquid separator tank, non return valve, ejector, vacuum relief valve, valve to control the flow of the liquid supply, vacuum gauges, pressure gauges and compound gauges. We can also provide information on our water sealed and oil sealed systems For more detailed information please contact our Sales Office.

Example for Model Designation

T R S C 100 – 700 / C – M / GH

T	Travaini Pump USA construction
R	Liquid Ring Pump
S	Single stage pump for medium vacuum
C	Design number
100	Flange size (mm)
700	Nominal capacity (m^3/h)
C	Shaft sealing C = Mechanical seal C2 = Double mechanical seal B = Packing seal
M	Close-coupled construction with lantern (by request)
GH	Materials of construction GH-F-RA-A3 = See table

Standard Materials of Construction

Part No.	Description	GH	F	RA	A3
106	Suction casing	Cast Iron			
107	Discharge casing				
137	Port plate				
110	Impeller housing				
210	Shaft	Stainless Steel AISI 420		Stainless Steel AISI 316	
147	Manifold	Steel			
357	Bearing housing mech. seal	Cast Iron			
230	Impeller	Bronze	Ductile Iron	Stainless Steel AISI 316	

Special Materials Available Upon Request

Indicative table: for further information please consult our Sales Office

motralec
4 rue Lavoisier . ZA Lavoisier . 95223 HERBLAY CEDEX
Tel. : 01.39.97.65.10 / Fax. : 01.39.97.68.48
Demande de prix / e-mail : service-commercial@motralec.com
www.motralec.com

DATA BASED ON :

DRY AIR AT 68 °F – 20 °C ———————

SATURATED AIR AT 68 °F – 20 °C - - - - - - - - - - - - - -

SERVICE LIQUID WATER

SERVICE LIQUID TEMPERATURE 59 °F – 15 °C

DISCHARGE PRESSURE 1013 mbar

S.S. PUMPS

CAPACITY : –10%

Tol.: 10%

PERFORMANCE DATA

LIQUID RING VACUUM PUMP

PUMP MODEL

TRSC 100–550

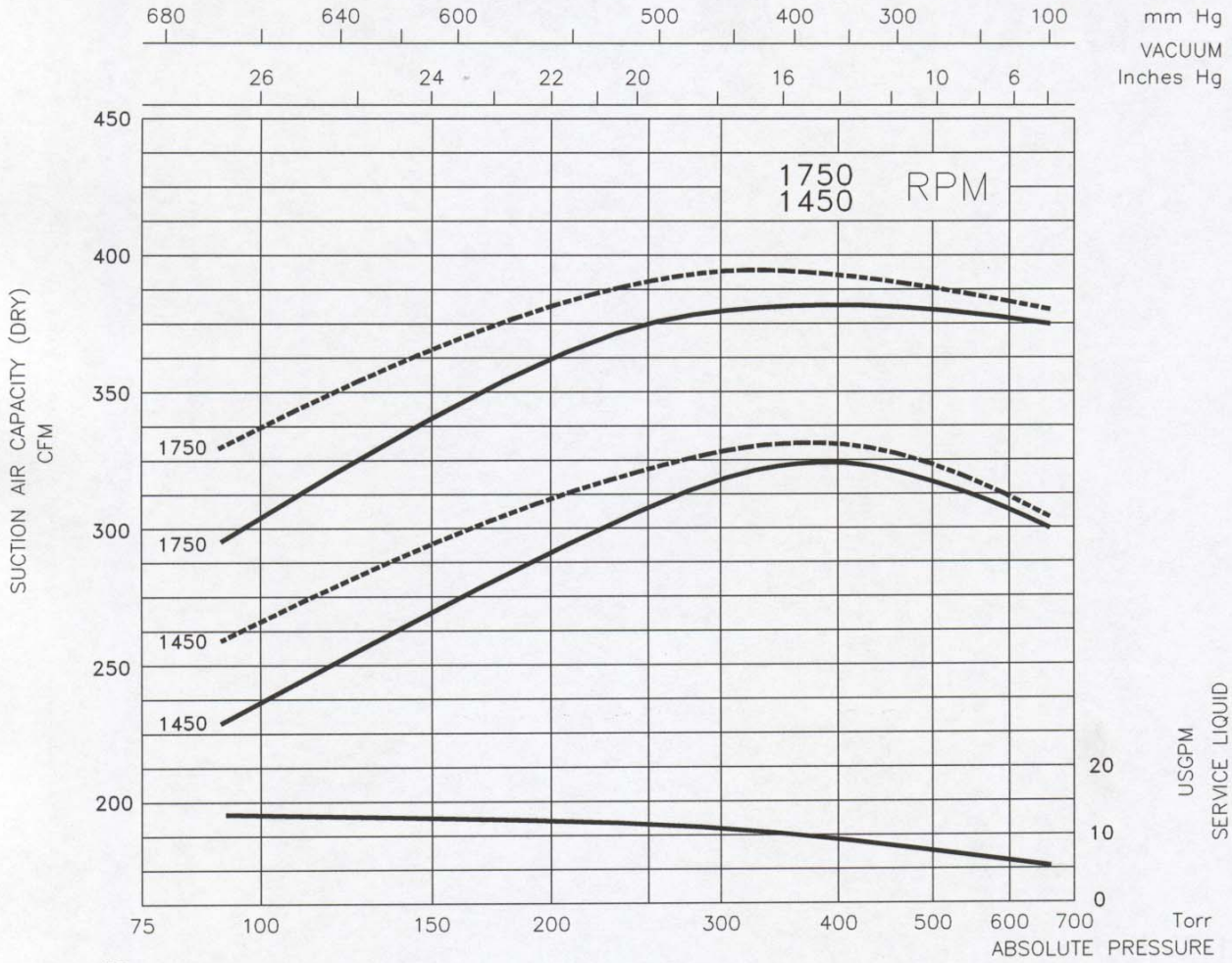

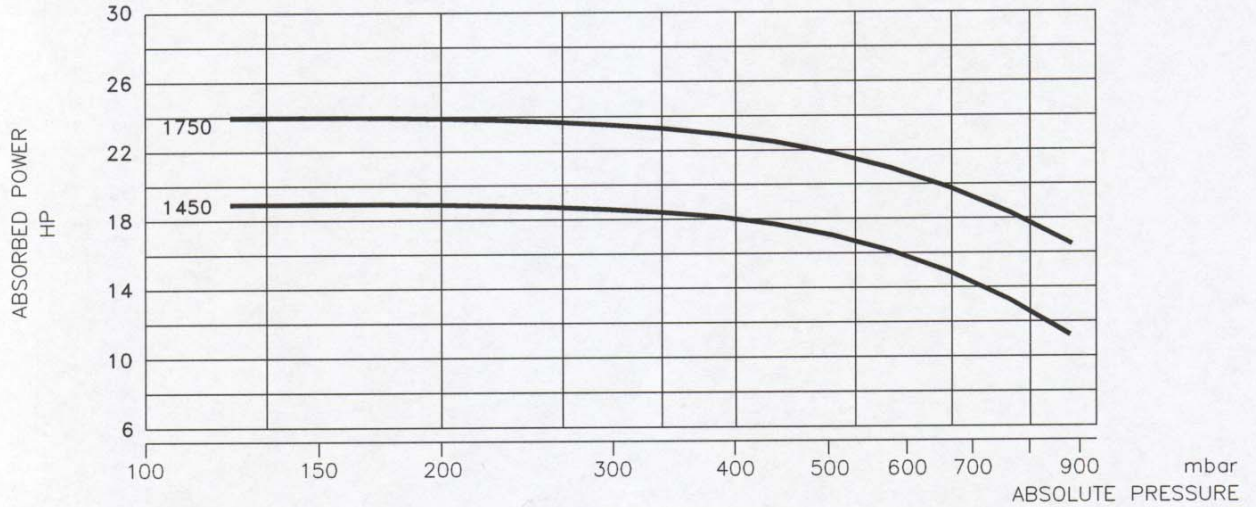

TRAVAINI PUMPS USA

Liquid Ring & Rotary Vane Vacuum Pumps and Systems

DATE: APRIL 97

DATA BASED ON :

DRY AIR AT 68 °F – 20 °C ————

SATURATED AIR AT 68 °F – 20 °C - - - - - - - - - -

SERVICE LIQUID WATER

SERVICE LIQUID TEMPERATURE 59 °F – 15 °C

DISCHARGE PRESSURE 1013 mbar

S.S. PUMPS

CAPACITY : –10%

Tol.: 10%

PERFORMANCE DATA

LIQUID RING VACUUM PUMP

PUMP MODEL

TRSC 100–700

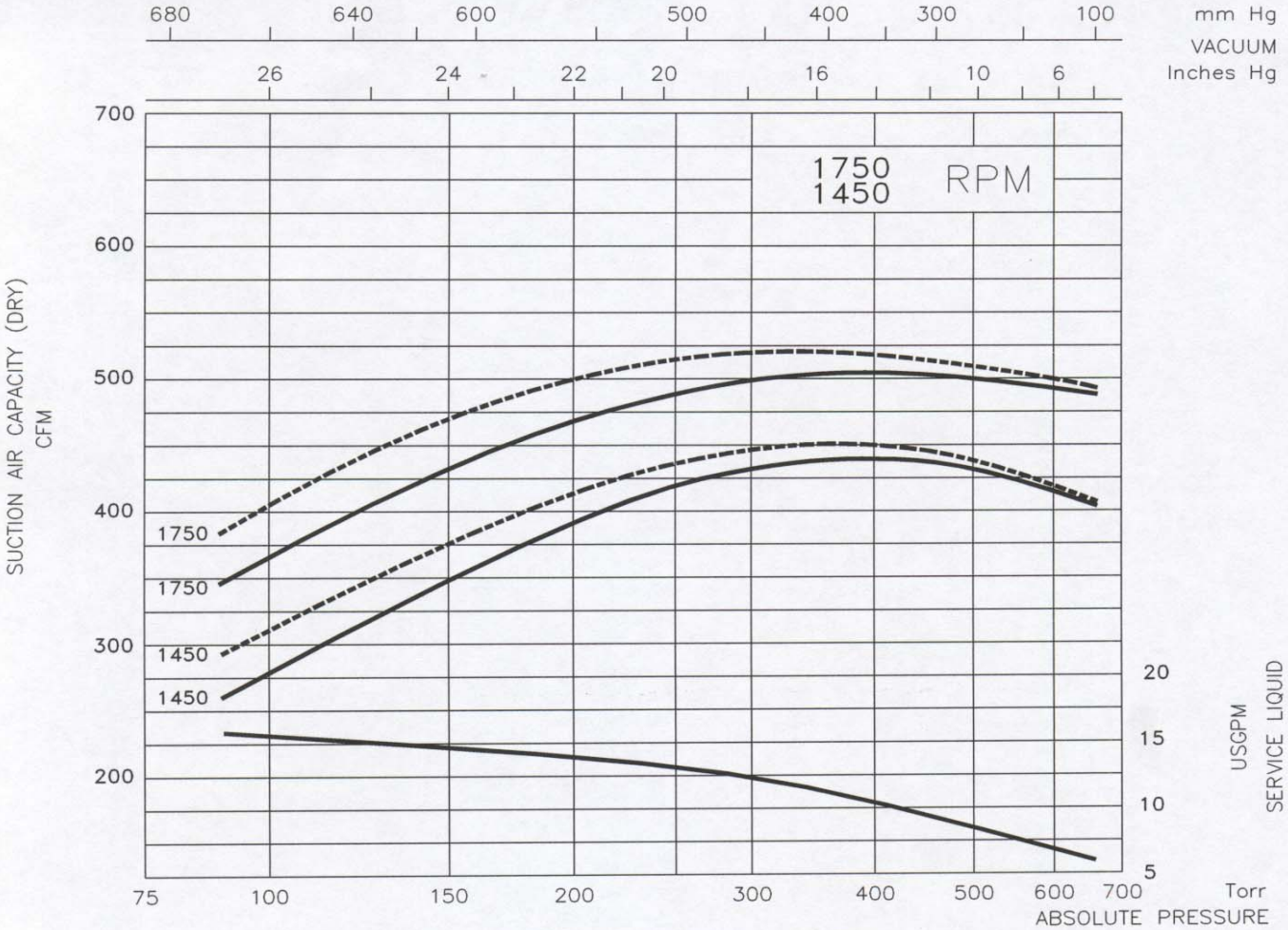

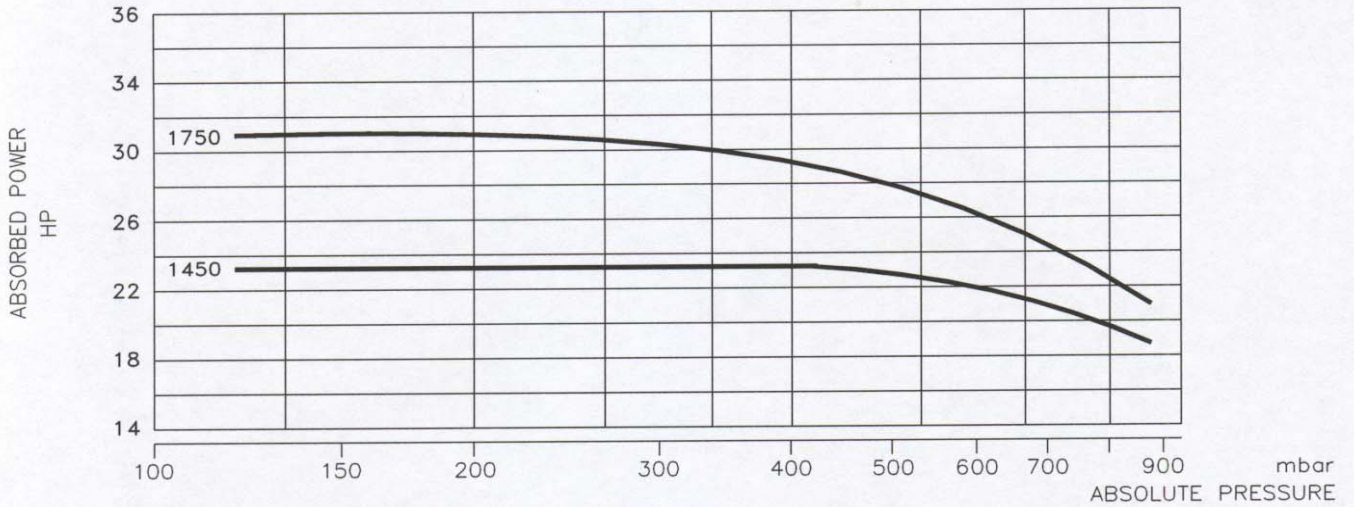

TRAVAINI PUMPS USA

Liquid Ring & Rotary Vane Vacuum Pumps and Systems

DATE: APRIL 97

TRSC 100/C

Bareshaft Construction with Mechanical Seal

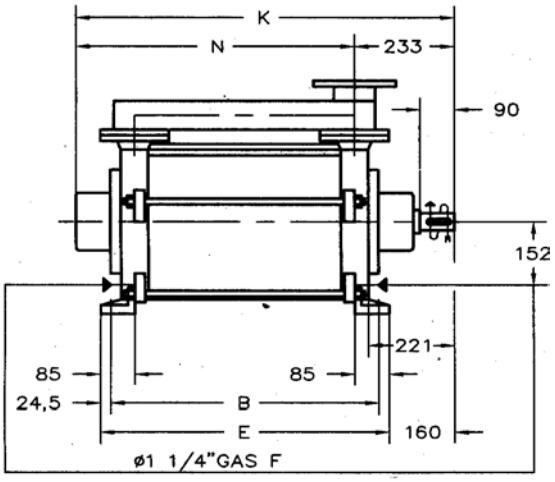

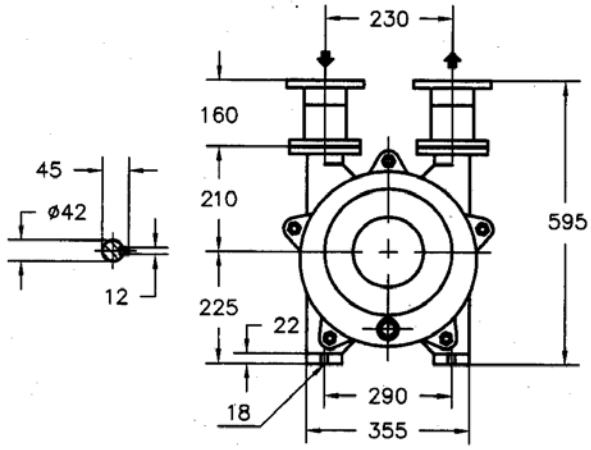

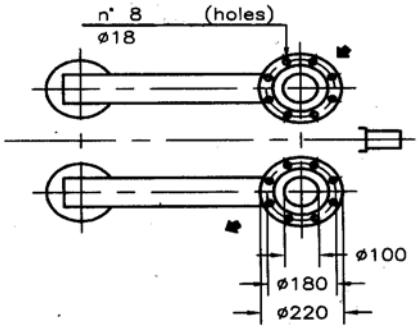

Liquid supply inlet

Feed pipe Ø 1 ½" GAS

Pump Type	B	E	K	N	Weight lbs.
TRSC 100-550/C	447	496	722	489	440
TRSC 100-700/C	512	561	787	554	506

Note: Dimensions in mm.
(mm to in = /25.4)

Closed-Coupled Construction with Mechanical Seal

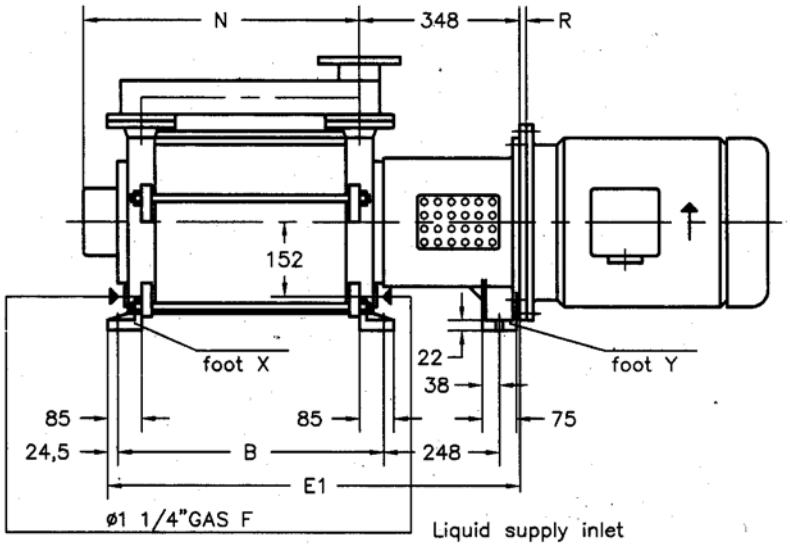

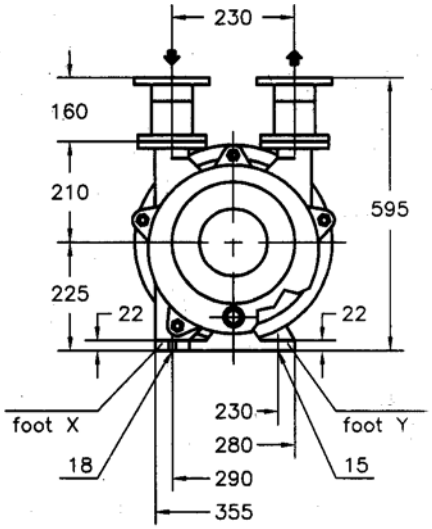

Pump Type	4 Poles Motor HP	PUMP				Weight[1] lbs.
		B	**E1**	**N**	**R**	
TRSC 100-550/C	20	447	763	489	-	495
	25					
TRSC 100-700/C	30	512	828	554		561
	40				24	594

1 Weight without motor

Dimensions for reference only. Please consult factory for certified drawing

The weights refer to GH construction

.

TRSC 100/C

Base-Mounted Construction (Baseplate-Coupling) with Mechanical Seal

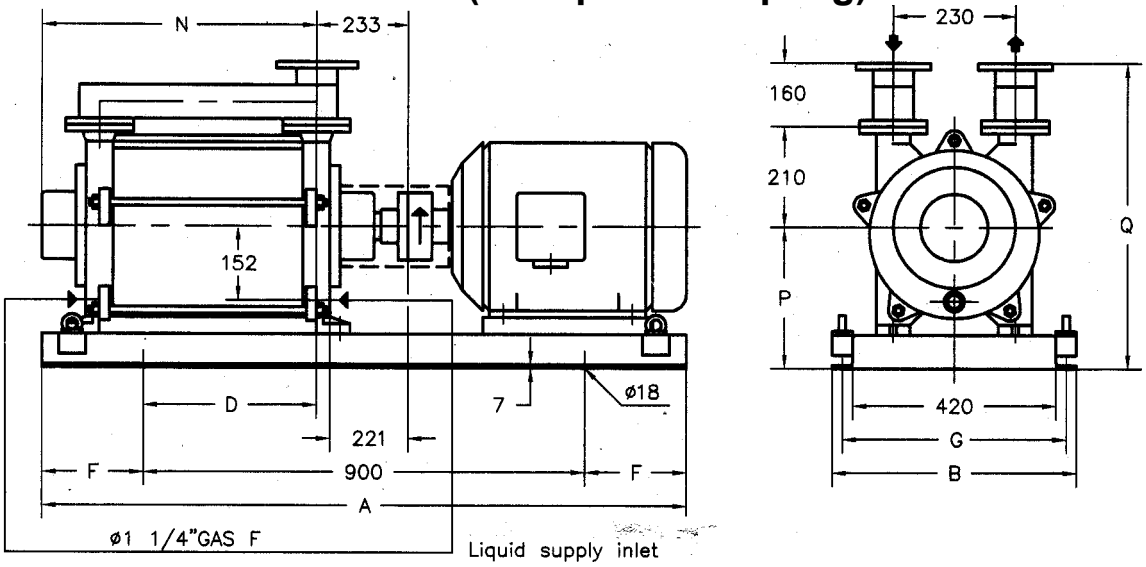

Pump Type	4 Poles Motor HP	Baseplate	Pump								Weight[1] lbs.
			A	B	D	F	G	N	P	Q	
TRSC 100-550/C	20	907	1200	510	295	150	470	489	325	695	719
	25				275						
TRSC 100-700C	25	041	1350	560	266	225	510	554	355	725	836
	30										
	40										847

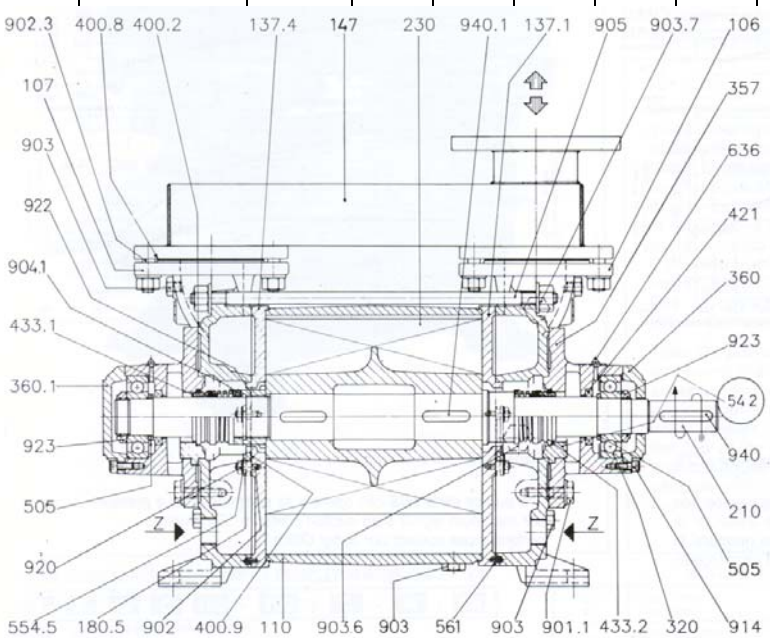

Typical Cross Section with Mechanical Seal

TRSC 100 – 550/C, 700/C

COMPONENTS

VDMA No	DESIGNATION	VDMA No	DESIGNATION	VDMA No	DESIGNATION
106	*Suction casing*	• 400.8	*Gasket*	903	*Plug*
107	*Discharge casing*	400.9	*Flat valve*	903.6	*Plug*
110	*Impeller casing*	• 421	*Radial seal ring*	903.7	*Plug*
137.1	*Side element*	• 433.1	*Mechanical seal c.c.w.*	904.1	*Grub screw*
137.4	*Side element*	• 433.2	*Mechanical seal c.w.*	905	*Tie-bolt*
147	*Manifold*	• 505	*Shoulder ring*	914	*Screw*
180.5	*Valve plate*	542	*Seal bush (A3 construction only)*	920	*Nut*
• 210	*Shaft*			922	*Nut*
• 230	*Impeller*	554.5	*Washer*	923	*Nut*
• 320	*Ball bearing*	561	*Cylinder pin*	940	*Key*
357	*Bearing and mech. seal housing*	636	*Grease nipple*	940.1	*Key*
360	*Bearing cover*	901.1	*Screw*	Z	*Liquid supply inlet*
360.1	*Bearing cover*	902	*Stud*		
• 400.2	*Gasket*	902.3	*Stud*		

◯ = A3 construction only

• = Recommended spare parts

motralec
4 rue Lavoisier . ZA Lavoisier . 95223 HERBLAY CEDEX
Tel. : 01.39.97.65.10 / Fax. : 01.39.97.68.48
Demande de prix / e-mail : service-commercial@motralec.com
www.motralec.com