320 Series
Single Stage End Suction Pumps

- *Capacities to 400 G.P.M. (75 M^3/HR)*
- *Heads to 210 Feet (42 Meters)*
- *Temperatures to 225°F (107°C)*

AURORA®
PENTAIR PUMP GROUP

motralec
4 rue Lavoisier . ZA Lavoisier . 95223 HERBLAY CEDEX
Tel. : 01.39.97.65.10 / Fax. : 01.39.97.68.48
Demande de prix / e-mail : service-commercial@motralec.com
www.motralec.com

Aurora 320 Pump

Setting New Standards of Efficiency

Liquid handling requirements are much more involved than they were five years ago. The variety of liquids being handled has increased along with temperatures and pressures. Today's installations demand quiet, smooth running pumps with long life. Aurora Pump's 80 years of experience with design, sales and manufacturing of centrifugal pumps has lead to the 320 Series. These modern pumps with a clean, straightforward design were developed with maximum interchangeability in mind. Let Aurora's highly reliable 320 pumps, offer an economical solution to your liquid handling problems.

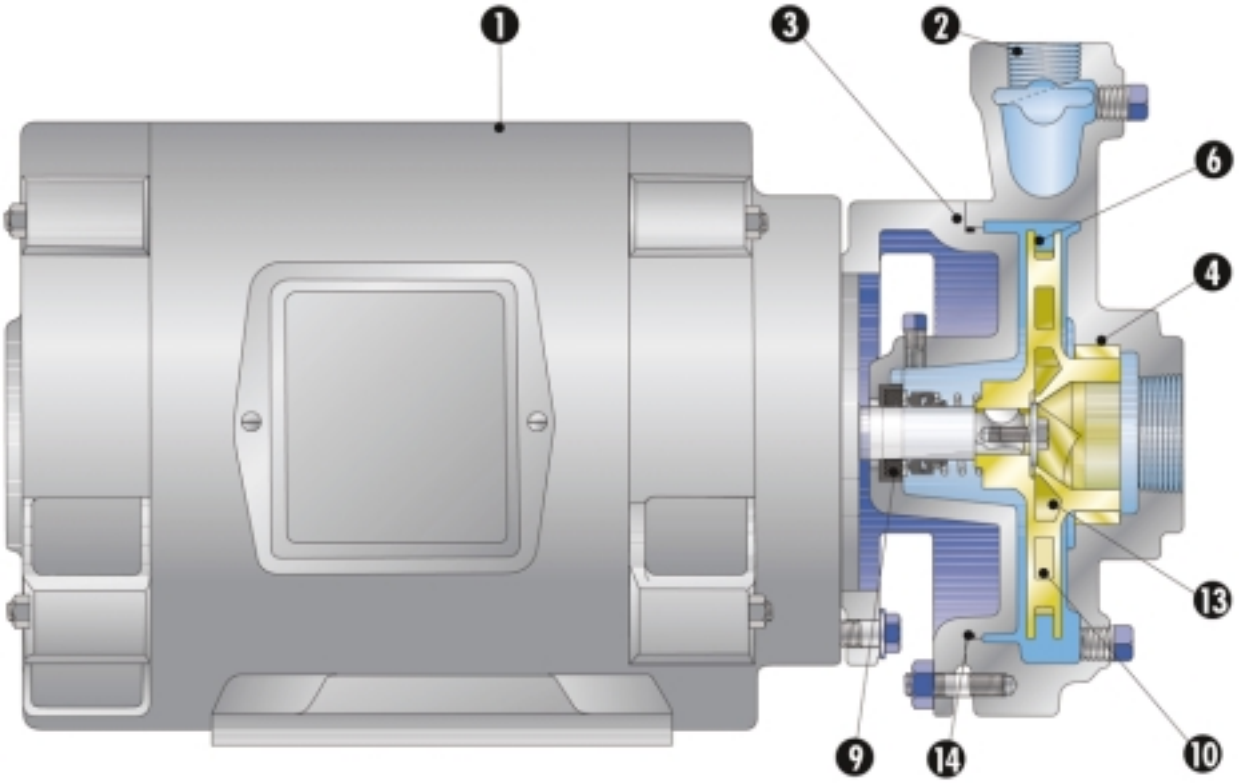

Quick Reference 320 Series Feature Selector

Standard
Top center-line mounted casing
Stainless steel shaft
"O" ring casing gasket
Case wearing ring
"Buna-N" and 316 stainless steel mechanical seal
Grease lubricated bearings (Model 324A)
Vacuum cast impeller
Coupling guard (Model 324A)

Optional
Totally enclosed motors
Optional discharge positions (see page 4)

Optional–Model 324A Only
Oil lubricated bearings and sealed bearings
Formed steel base
Steel drip-rim bases
Explosion proof motors

Features

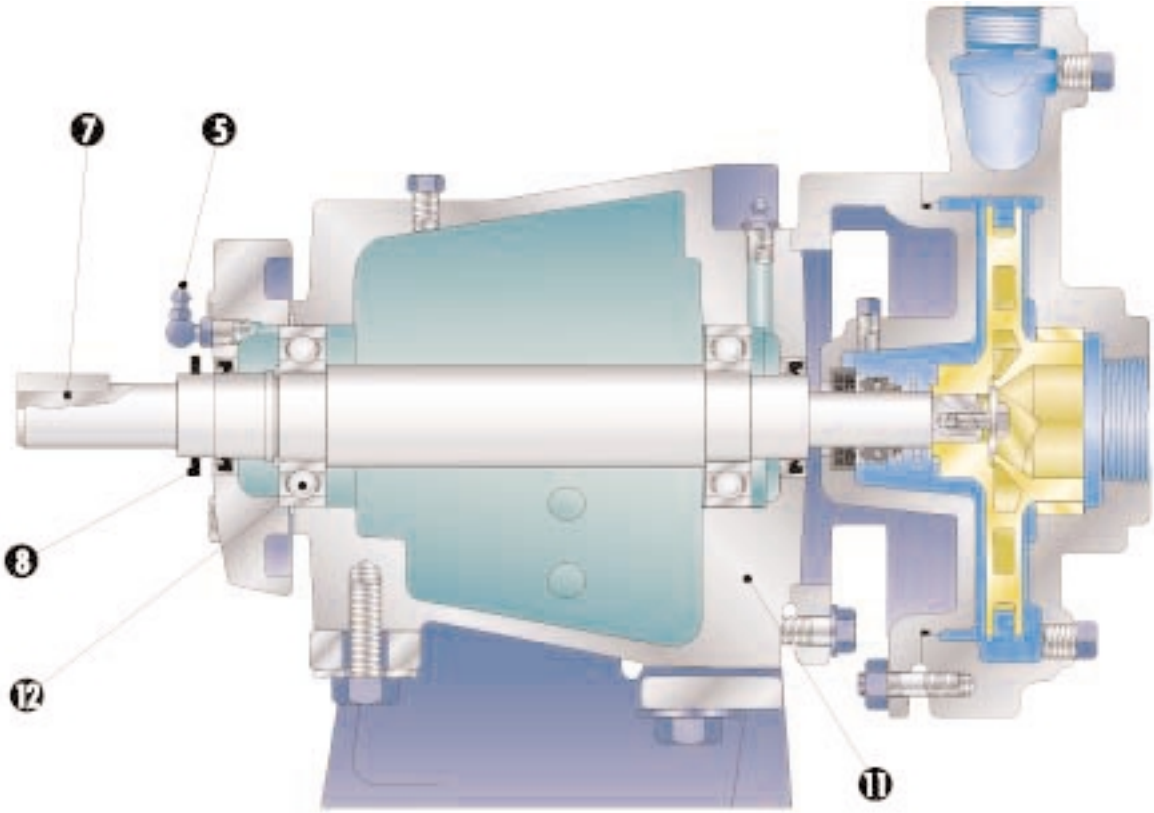

1 LOW NOISE LEVEL CLOSE-COUPLED MOTORS are built to Aurora Pump's exacting vibration specifications.

2 VERTICAL CENTER-LINE DISCHARGE makes pump Self-Venting, avoids vapor locks and minimizes pipe strain.

3 BACK PULL-OUT DESIGN simplifies disassembly. The suction and discharge piping is not disturbed.

4 CASE WEARING RING prevents wear on casing and is easily and inexpensively replaced. Standard ring is bronze.

5 LUBRICATION FITTINGS are conveniently located for quick accessibility and provide positive bearing lubrication.

6 DYNAMICALLY BALANCED IMPELLER is keyed to the shaft and secured by a 316 stainless steel capscrew and washer.

7 STAINLESS STEEL SHAFT designed for minimum deflection, not to exceed .002" at the sealing faces at maximum load.

8 OIL SEALS AND NON-SPARKING NEOPRENE rotating slingers protect both bearings during pump operation and wash-down.

9 MECHANICAL SEAL has "Buna-N" bellows and cup with 316 stainless steel parts precision made for long life.

10 ENCLOSED IMPELLER design provides highest efficiency and lowest wear for long service life.

11 COMPUTER MACHINED major components with 360 degree registered fits to assure concentricity of all parts.

12 BEARINGS selected for 2 year minimum life at maximum conditions of load. Available as grease, oil lubricated or sealed.

13 VACUUM CAST IMPELLER quality controlled manufacturing process assures consistently high performance.

14 "O" RING SEAL … no gaskets pierced by bolts or studs … assures maximum trouble-free sealing.

320 Range Chart

3500 RPM

INDIVIDUAL PERFORMANCE CURVES SHOULD BE CHECKED FOR FINAL SELECTION. FOR SELECTIONS NOT SHOWN ON THE CHART PLEASE REFER TO THE FACTORY.

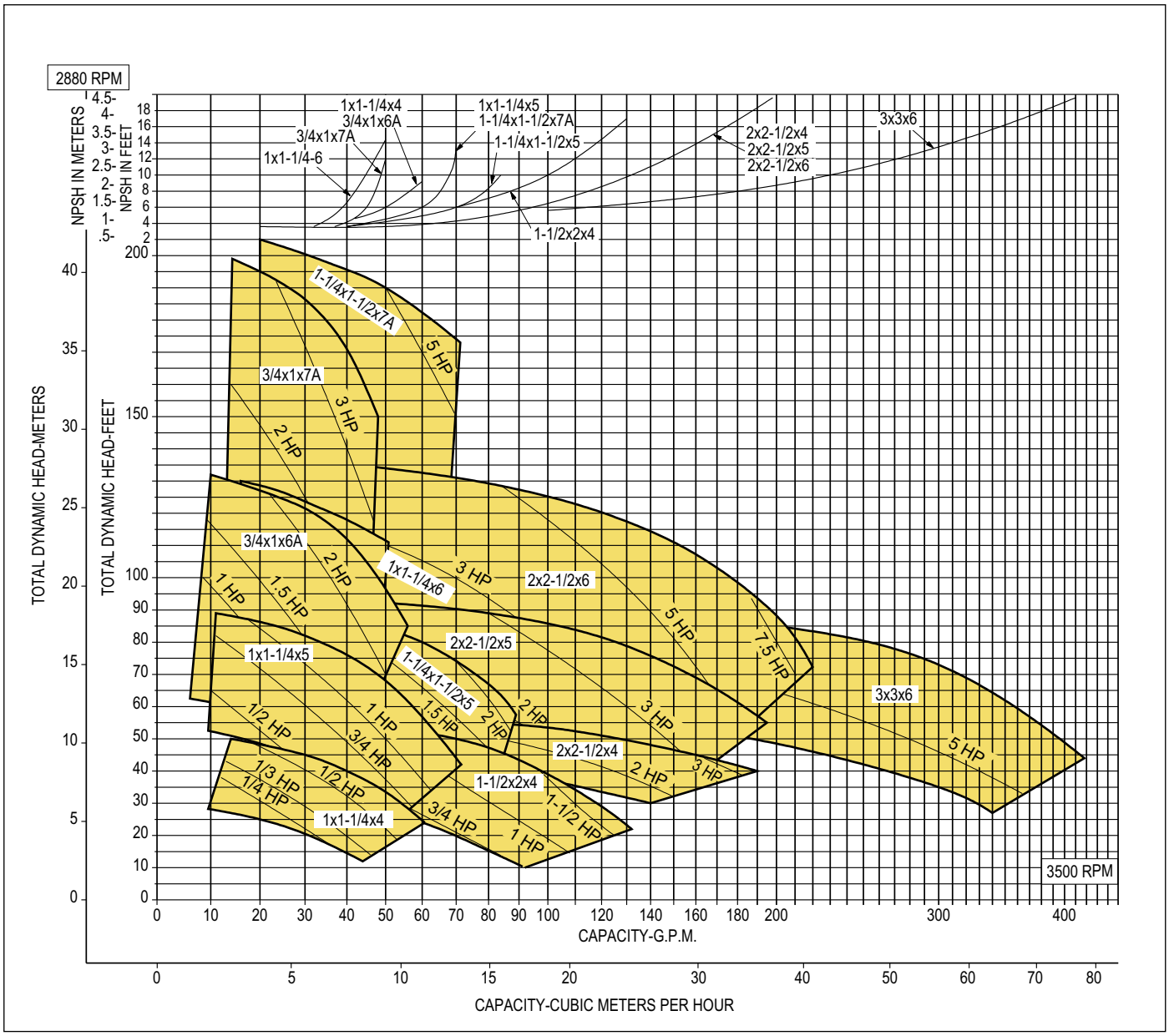

320 Range Chart

1750 RPM

INDIVIDUAL PERFORMANCE CURVES SHOULD BE CHECKED FOR FINAL SELECTION. FOR SELECTIONS NOT SHOWN ON THE CHART PLEASE REFER TO THE FACTORY.

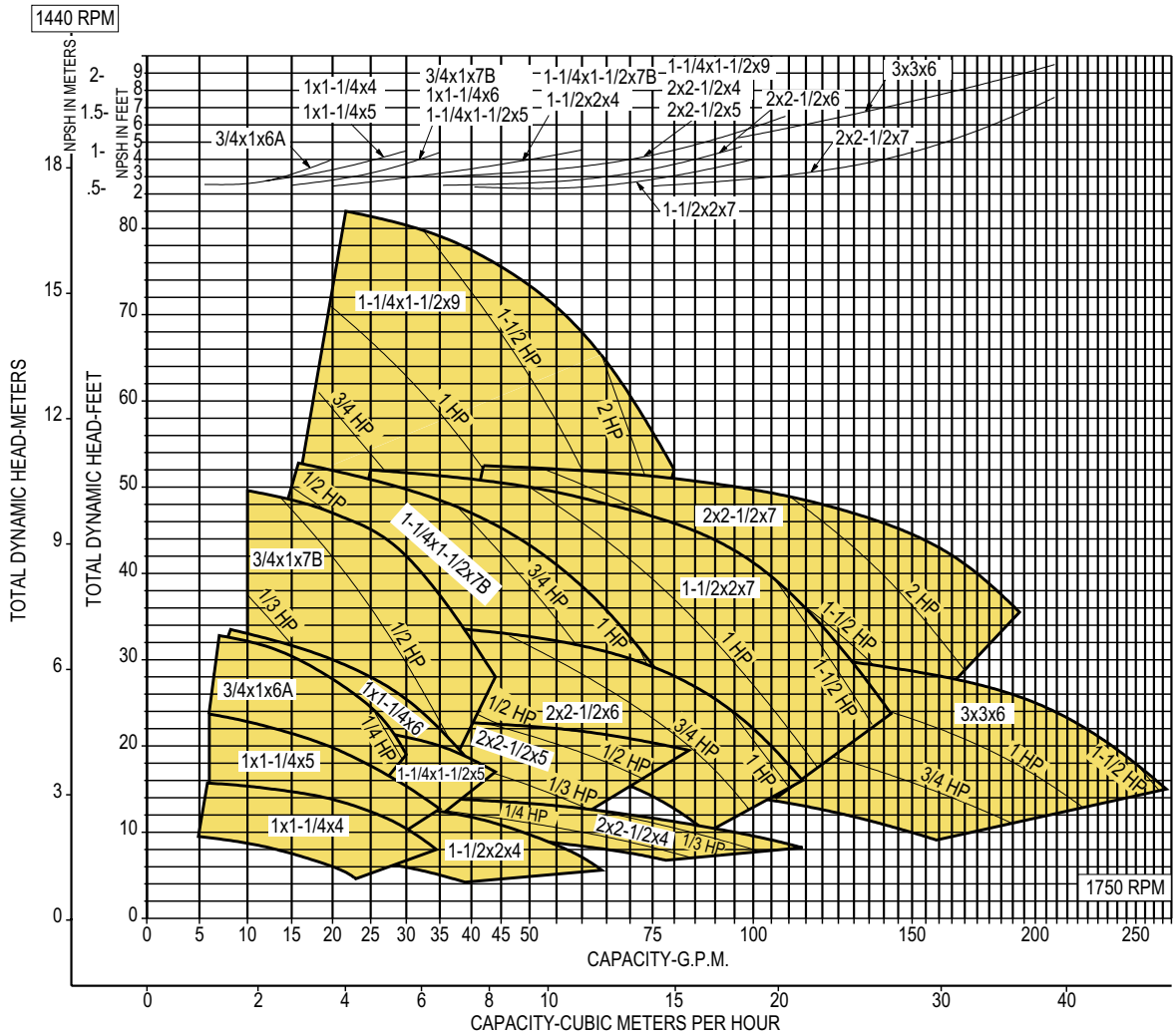

Engineering Specifications

Pump Part	Bronze Fitted	All Iron	All Bronze* (See Note 1)
Casing	Cast Iron ASTM A48	Cast Iron ASTM A48	Bronze ASTM B62
Case Wearing Ring	Bronze ASTM B62	Cast Iron ASTM A48	Bronze ASTM B62
Impeller	Bronze ASTM B584	Cast Iron ASTM A48	Bronze ASTM B584
Motor Bracket	Cast Iron ASTM A48	Cast Iron ASTM A48	Bronze ASTM B52
Shaft	Stainless Steel AISI 416	Stainless Steel AISI 416	Stainless Steel** AISI 316
Power Frame Frame 324A	Cast Iron ASTM A48	Cast Iron ASTM A48	Cast Iron ASTM A48
Mechanical Seal	Stainless steel metal parts, "Buna-N" elastomer parts, Ni-resist seat and carbon washer. *All bronze has Viton elastomer parts and ceramic seat.		

Notes: 1. Model 323 not available in all bronze construction.
** Close coupled 321 all bronze pumps must have a motor with 316 stainless steel shaft extension.

Design Details

Area	Description	Dimensions
Liquid End	Pipe Connections–threaded N.P.S.F.	Varies
	Rotation–facing suction	CCW
Pump Shaft	Diameter at impeller	19/32
	Diameter at seal	3/4
	Diameter between bearings	1-3/8
	Diameter at coupling end	7/8
	Coupling keyway	1-3/8 long x 3/32 deep
	Max. deflection at seal face	.002
Ball Bearings	Bearing (inboard radial)	206K
	Bearing (outboard thrust)	206 KG
	Bearing centers	5-11/16
	Bearing type	Ball
	Min B_{10} bearing life under maximum load	2 Years

Limitations

Maximum Based on Standard Materials and Water		
Speed–RPM		3500
Horsepower		7-1/2
Temperature–°F	Close Coupled	225
	Frame Mounted	225
Hydrostatic Test–P.S.I.		220
Case Working Press–P.S.I.		175
Suction Press–P.S.I.		175

End suction products such as the flexible coupled horizontal pump are used in offices and high rise buildings for internal environment control. End suction pumps for HVAC installation come in a variety of configurations including close coupled, flexible coupled, horizontal or vertical mounted units.

Dimensions

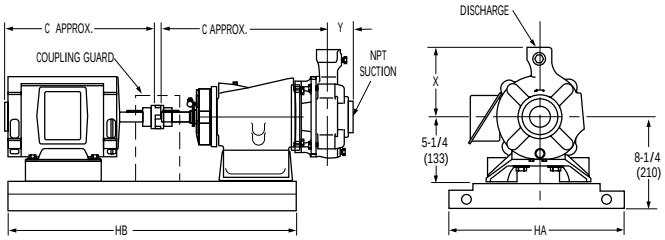

Pump Dimensions–323 (See Note 7)

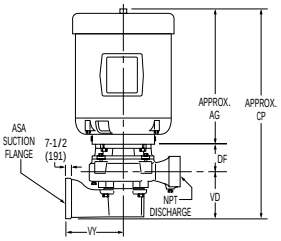

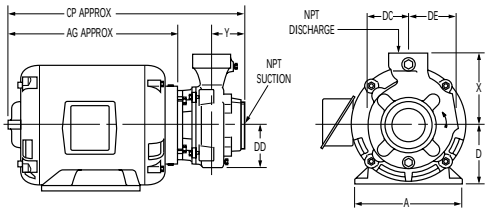

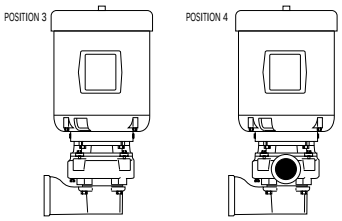

Models 321-323

Frame	Horsepower 3500 RPM	Horsepower 1750 RPM	Motor Weight (Lbs.)	A	D	AG	CP 321	CP 323
56	1/3	1/3	29	6-3/4 (171)	3-1/2 (89)	11 (279)	17-1/2 (445)	20 (508)
	1/2	1/2	46					
	3/4	3/4	56					
	1	1	56					
	1-1/2	1-1/2†	65					
	2	N/A	80					
145T		1-1/2*	42	7 (178)	3-1/2 (89)	11 (279)	17-1/2 (445)	20 (508)
	3†	2†	48					
182T	3*	2*	65	9 (229)	4-1/2 (114)	11 (279)	17-1/2 (445)	20 (508)
	5	3	69					
184T	7-1/2†	3	79	9 (229)	4-1/2 (114)	12 (305)	18-1/2 (470)	21 (533)
		5†	83					

* Single phase only. † Three phase only.

Model 324A

Frame	Horsepower 3500 RPM	Horsepower 1750 RPM	Weight in (Lbs.) Motor	Weight in (Lbs.) Base	C	CP	HA	HB
48	1/3 - 1/2	1/3	30	100	10 (254)	27 (659)	15 (381)	22-1/2 (572)
56	3/4 - 1	1/2 - 3/4	50	100	12 (305)	29 (737)	15 (381)	22-1/2 (572)
143T	1-1/2	1	34	100	12 (305)	28 (711)	15 (581)	22-1/2 (572)
145T	2 - 3	1-1/2 - 2	42	100	13 (330)	29 (737)	15 (581)	26-1/2 (673)
182T	5	3	65	100	13 (330)	30 (762)	15 (581)	26-1/2 (673)
184T	7-1/2	5	79	100	14 (356)	31 (787)	15 (581)	26-1/2 (673)
213T	10	7-1/2	155	100	16 (406)	33 (838)	17-1/4 (438)	30-1/2 (762)

DISCHARGE POSITIONS

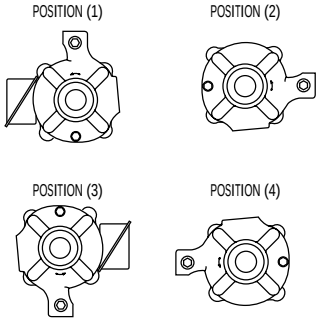

Pump Size Discharge	Pump Size Suction	Pump Size Case Bore	Pump Weight (lbs) 321	Pump Weight (lbs) 323	Pump Weight (lbs) 324	X	Y	DC	DD	DE	VD 323	VE	VY 323
3/4	1	6A	25	30	55	5-1/2 (30)	1-3/4 (3)	3-5/16 (11)	3-7/16 (12)	3-7/8 (15)	3-5/8 (13)	2-3/8 (6)	5 (25)
3/4	1	7	35	40	65	6-1/4 (39)	1-7/8 (3)	3-15/16 (16)	4 (16)	4-7/16 (20)	3-3/4 (14)	2-3/8 (6)	8-1/2 (72)
1	1-1/4	4	21	26	51	4-1/8 (17)	1-11/16 (3)	2-3/8 (6)	2-3/8 (6)	2-7/16 (6)	2-5/8 (7)	2-3/8 (6)	4 (16)
1	1-1/4	5	27	32	57	5 (25)	2 (4)	2-13/16 (8)	2-7/8 (8)	3 (9)	3-3/4 (14)	2-3/8 (6)	5 (25)
1	1-1/4	6	29	34	59	5-1/2 (30)	1-15/16 (4)	3-5/16 (10)	3-3/8 (11)	3-7/8 (15)	3-13/16 (15)	2-3/8 (6)	5 (25)
1-1/4	1-1/2	5	27	32	57	5 (25)	1-15/16 (4)	2-7/8 (8)	2-15/16 (9)	3-7/16 (12)	4 (16)	2-3/8 (6)	5 (25)
1-1/4	1-1/2	7A	37	42	67	6-1/4 (39)	2 (4)	4 (16)	4-1/16 (17)	4-1/2 (20)	3-7/8 (15)	2-3/8 (6)	8-1/2 (72)
1-1/4	1-1/2	7B	37	42	67	6-1/4 (39)	2-7/16 (6)	4 (16)	4-1/8 (17)	4-5/8 (21)	4-5/16 (19)	2-3/8 (6)	8-1/2 (72)
1-1/4	1-1/2	9	52	57	82	8 (64)	2-1/4 (5)	5-13/16 (34)	5-3/16 (27)	5-13/16 (34)	4-1/8 (17)	2-3/8 (6)	8-1/2 (72)
1-1/2	2	4	24	29	54	5 (25)	2-1/8 (5)	2-1/2 (6)	3 (9)	2-3/4 (8)	4-15/16 (24)	3-1/2 (12)	6 (36)
1-1/2	2	7	38	43	68	7 (49)	2-1/4 (5)	4-1/16 (17)	4-1/4 (18)	4-7/8 (24)	5 (25)	3-1/2 (12)	6 (36)
2	2-1/2	4	28	33	58	5 (25)	3-1/16 (9)	2-1/2 (6)	3 (9)	2-13/16 (8)	5-3/8 (29)	3-1/2 (12)	6 (36)
2	2-1/2	5	31	36	61	6 (36)	2-11/16 (7)	3 (9)	3-3/16 (10)	3-7/16 (12)	5-3/16 (27)	3-1/2 (12)	6 (36)
2	2-1/2	6	36	41	66	6 (36)	2-3/4 (8)	3-1/2 (12)	3-11/16 (14)	4-3/8 (19)	5-1/4 (28)	3-1/2 (12)	6 (36)
2	2-1/2	7	43	48	73	7 (49)	2-15/16 (9)	4-1/16 (17)	4-5/16 (19)	4-7/8 (24)	5-1/8 (26)	3-1/2 (12)	6 (36)
3	3	6	48	53	78	8 (64)	3-5/8 (13)	3-7/8 (15)	4-7/16 (20)	5-7/8 (35)	7-3/4 (60)	2-1/4 (5)	8-1/2 (72)

Notes:

1. Dimensions and weights are approximate.
2. All dimensions are in inches (mm) and may vary ±1/4 (6).
3. Frame sizes, "C" and "AG", dimension and motor weight are for open drip-proof motors only.
4. Conduit box is shown in approximate position. Dimensions are not specified as they vary with each motor manufacturer.
5. Add pump, base and motor weight for unit weight.
6. Not for construction purposes unless certified.
7. Discharge position No. 3 is not available on Models 323 and 324A. Position No. 1 is furnished as standard unless otherwise specified.
8. Model 323 not available in all bronze construction.

Engineering Specifications

Engineering Specifications

The contractor shall furnish (and install in location as shown on the plan) an Aurora Type (321 horizontal) (323 flange mounted) (324A horizontal) centrifugal pump size … (bronze fitted) (all bronze) (all iron) construction. Each pump shall have a capacity of … GPM at … ft. total head and … specific gravity. The pump is to be furnished with case wearing ring and a mechanical seal, with all metal parts to be 316 stainless steel, "Buna-N" bellows, Ni-resist seat, and carbon washer.

Flexible Coupled Pumps Model 324A

The pump shaft is to be stainless steel with (grease lubricated) (oil lubricated) (sealed) bearings. The pump is to be flexible coupled to a standard horizontal NEMA motor of …HP, …phase, …hertz,… voltage, … RPM (open drip proof) (totally enclosed fan cooled) (explosion proof) enclosure. The pump shall be mounted on a (fabricated steel drip rim) (steel) baseplate. Pump and motor alignment shall be checked in accordance with the Standards of the Hydraulic Institute after the pump has been installed.

Close Coupled Model 321-323

The pump is to be close coupled to a NEMA motor of …HP, …phase,…hertz,…voltage,…RPM (open drip proof) (totally enclosed fan cooled) enclosure, with stainless steel motor shaft. The motor shall be designed to Aurora Pump specifications as to vibration limits.

Many thousands of Aurora pumps serve building facilities, municipalities, utilities, industries, institutions, and maritime, government, and armed services throughout the world...the result of dedication to creative pump engineering since 1919, when the firm was founded as the Aurora Pump and Manufacturing company. New product development, product refinement, and expansion of sizes to accommodate broader ranges of applications have been continuous and aggressive since that date. The resulting company growth has elevated Aurora to its present prominent industry position.

NOTE: Aurora Pump reserves the right to make revisions to its products and their specifications, and to this bulletin and related information, without notice.

AP-320/Rev. H 12.98 (3M 2.01)