» THE SPECIALIST FOR HIGH FLOW RATES

The new HOMA propeller pump series P

› high flow rates
› efficient motor technology
› with optional patent-protected intake chamber





WE KEEP WATER MOVING

HOMA propeller pumps have been in reliable service across the world for decades. HOMA has always been a step ahead of the latest technology, achieving a cost-effective operational process and the utmost reliability through continuous optimization of the hydraulic components. All the company's knowledge and creative potential goes into its products and services, to deliver maximum value for the customer. With its promise of quality "Made in Germany", HOMA sets new standards in innovation, reliability and cost-effectiveness.

motralec ★★★★★ 4,8/5 . +600 avis

4 rue Lavoisier, 95220 Herblay-sur-Seine . Tél. 01 39 97 65 10 . service-commercial@motralec.com . www.motralec.com

OUR KNOW-HOW IS YOUR ADVANTAGE

Outstanding versatility:
HOMA's propeller pumps are designed for the transport of large flow rates at a low discharge head. They are used in a range of applications, for instance in flood management, the transport of untreated water in the production of drinking water, industrial cooling water circuits, the emptying of dry docks in shipbuilding, for use in fish farms, or in water attractions at amusement parks. HOMA's propeller pumps in the P series have proven successful in numerous installations throughout the world thanks to their robust construction and reliability.

Outstandingly reliable:
The high quality of materials used and the generous dimensions of all component parts are just two factors that guarantee the reliability of the HOMA propeller pump series. Each unit is tested at the HOMA test centre on the relevant operating points to ensure the operational requirements are met, and HOMA's high quality standards are satisfied.

Outstandingly innovative:
Besides their compact construction, HOMA's propeller pumps are distinguished by innovative features such as their adjustable propeller blades, or the self-cleaning function with a cutting groove in the guide casing. New standards are also set by the optional infeed chamber that optimizes the water supply for hydraulic systems - thus avoiding the need for an expensive engineering design with profiling concrete. The intake chamber is available for all sizes in the HOMA propeller pump series. Further advantages and information about the patent-protected HOMA intake chamber can be found on page 6.





HOMA's P series propeller pumps are designed for the transport of large quantities of water



Flood management - one of a range of applications for propeller pumps.



Water attractions at amusement parks showcase another of HOMA's P series' outstanding benefits.

motralec ★★★★★ 4,8/5 . +600 avis

4 rue Lavoisier, 95220 Herblay-sur-Seine . Tél. 01 39 97 65 10 . service-commercial@motralec.com . www.motralec.com

DESIGN - TECHNOLOGY THOUGHT THROUGH STEP BY STEP

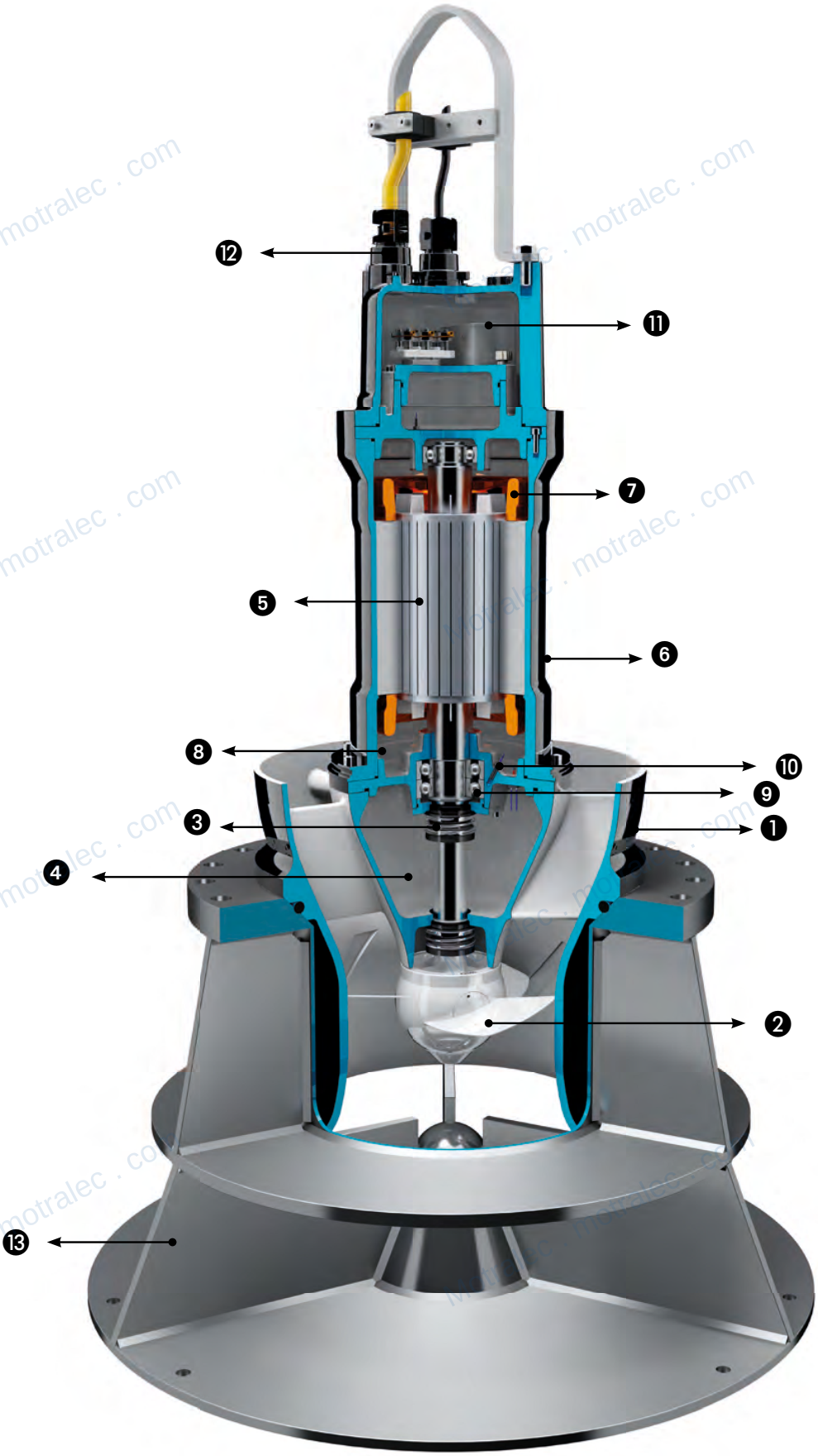

motralec ★★★★★ 4,8/5 . +600 avis

4 rue Lavoisier, 95220 Herblay-sur-Seine . Tél. 01 39 97 65 10 . service-commercial@motralec.com . www.motralec.com

DESIGN - TECHNOLOGY THOUGHT THROUGH STEP BY STEP

Quality is measurable - HOMA's fully submersible block units stand out through the generous sizing of all important components alongside excellent material quality and robust mechanical design.

❶ NOMINAL DIAMETERS

for installation tubes DN 600 / DN 700 / DN 900 / DN 1000

❷ PROPELLERS

Fluidically optimized propeller blades made from stainless steel. The blades can be continuously adjusted according to requirements and operating points. This allows the unit to be subsequently readjusted to adapt to varying plant conditions.

❸ SHAFT SEALING

Two independently operating mechanical seals in tandem arrangement.

❹ OIL CHAMBER

Separate large oil chamber, lubricating and cooling the mechanical seals, forming an extra safety and inspection element. Additional electronic seal condition monitoring probe on request.

❺ MOTOR

Three-phase electric motors with 4-, 6- or 8-pole winding. Insulation class of winding H (180°C), protection class IP 68.

❻ MOTOR COOLING

Motors for submerged operations are cooled by sourrounding liquid.

❼ THERMAL SENSOR (BI-METAL)

Standard on all models, embedded in the motor winding. PTC thermistor or PT100 available on request.

❽ MOISTURE MONITORING IN STATOR CHAMBER

❾ SHAFT BEARING

Robust, maintenance-free, permanently lubricated roller bearings.

❿ TEMPERATURE MONITORING

of the shaft bearings available on request.

⓫ CABLE JUNCTION CHAMBER

Enclosed water-pressure tight cable-connection compartment

⓬ PRESSURE SEALD CABLE ENTRY

Ensures reliable waterproofing and safe operation.

⓭ HOMA INTAKE CHAMBER (OPTIONAL)

Optimized water intake for hydraulic systems. Free installation in the pump building.

DESIGNATION SYSTEM FOR PROPELLER PUMPS

Series	Propeller diameter	Number of blades	Blade angle in °	Motor frame size	Motor power (coded)	Speed	
Pump							
P	**42**	**4**	**23-**	**G**	**19**	**6**	**(C)+(S)**
P = Propeller pump	31 = 310 mm 42 = 420 mm 58 = 580 mm 64 = 640 mm			F, G, H, R		4 = 4pole (1450 U/min) 6 = 6pole (960 U/min) 8 = 84pole (730 U/min)	C = Monitoring sensor in oil barrier chamber S = Humidity monitoring of the stator space

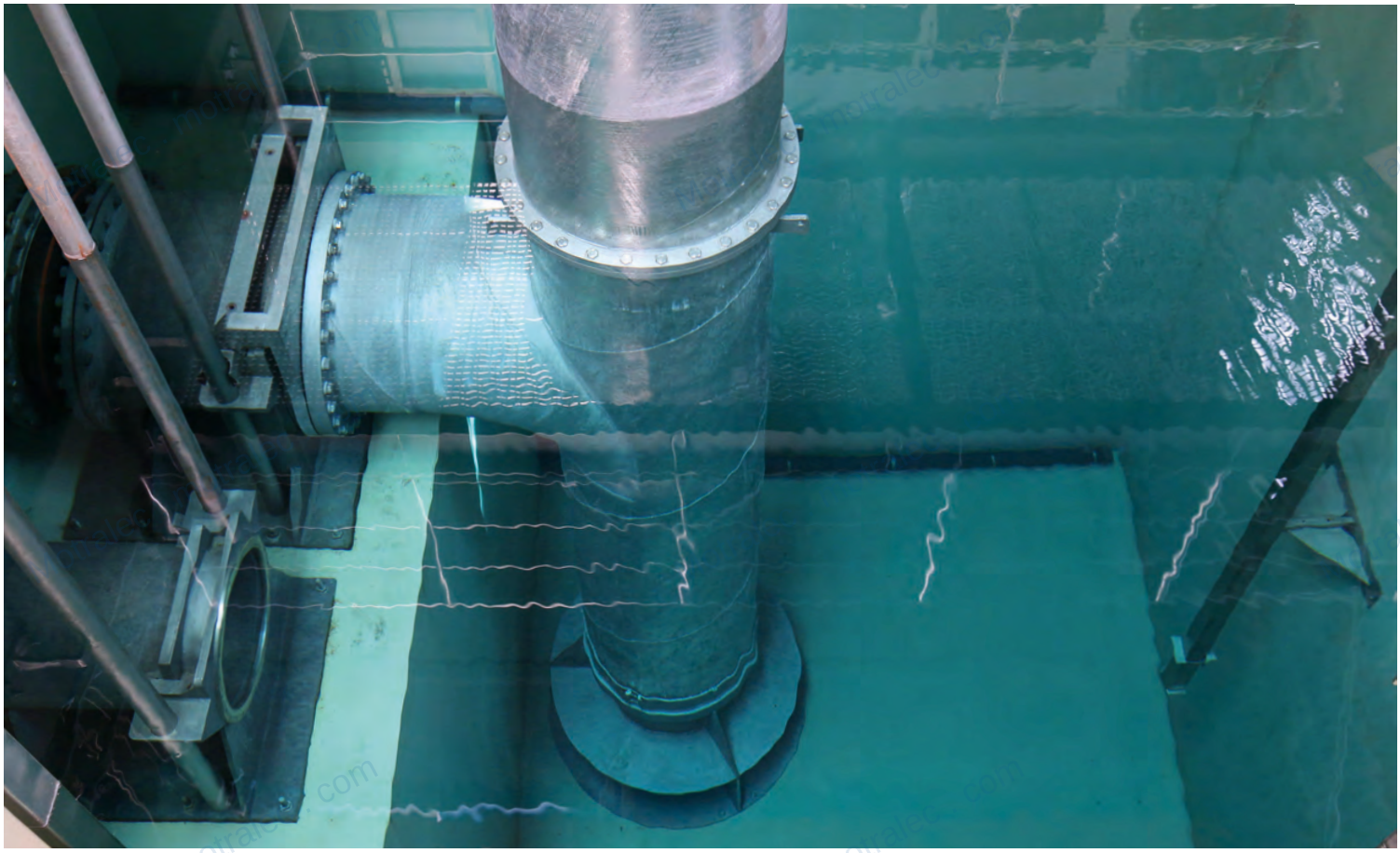

INTAKE CHAMBER FOR PROPELLER PUMPS

The new patent-protected HOMA intake chamber optimizes the water intake and inflow of the propeller pump hydraulic system. This avoids the need for an expensive engineering design with profiling concrete. Subsequent refitting of HOMA units thus poses no problems, independent of the structural conditions. The intake chamber is available as an option for all HOMA propeller pumps.

ADVANTAGES OF THE HOMA INTAKE CHAMBER

- Direct transmission of all pump force as well as of vibrations at the base of the ground plate
- No static or dynamic stresses on the structural ceiling.
- Optimized water intake for the propeller pump's hydraulic system Flow cone, flow baffles and upper baffle plate.
- No expensive engineering design with profiling concrete required
- Volume gain through elimination of expensive concrete profiling measures
- Free assembly / installation in the pump chamber without partitions or concrete infeed chamber
- No supporting plate with gusset plates required for power transmission from the pipe shaft to the ceiling.



motralec ★★★★★ 4,8/5 . +600 avis

4 rue Lavoisier, 95220 Herblay-sur-Seine . Tél. 01 39 97 65 10 . service-commercial@motralec.com . www.motralec.com

TECHNICAL DETAILS THAT CONVINCE

PERFORMANCE

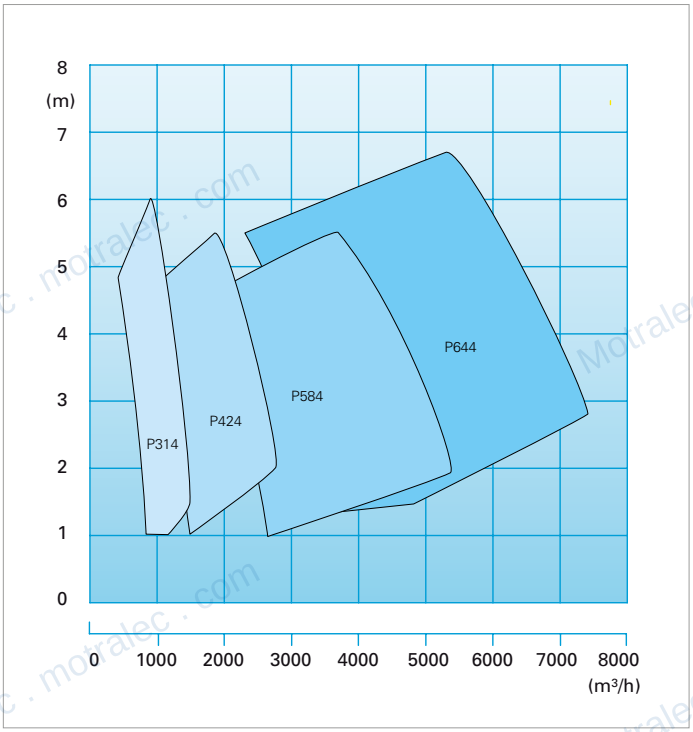

INSTALLATION

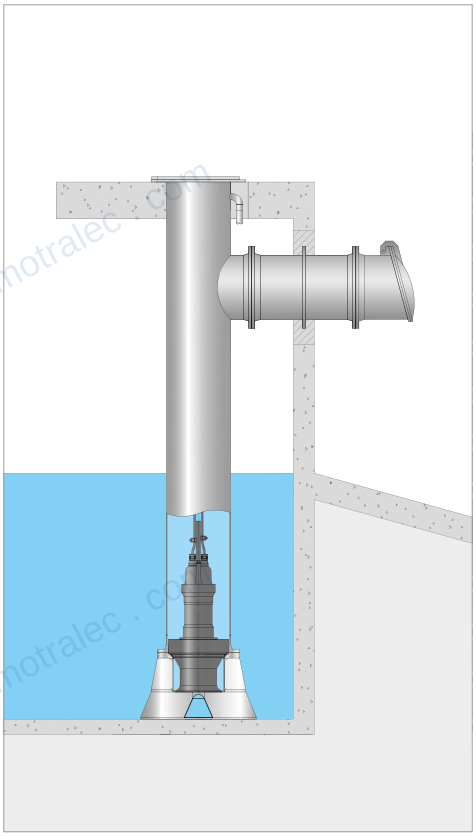



Each unit is tested in the modern test centre before delivery. This is how we guarantee HOMA's renowned quality standards.

TECHNICAL DATA

Type	Dimension Ø (mm)	Qmax (m³/h)	Hmax (m)	Motor-output P_2 (kW)
P314	600	1800	6,0	18,5-33,0
P424	700	2800	5,5	33,0-58,0
P584	900	5700	5,7	53,0-100,0
P644	1000	7500	6,7	100,0-160,0

MATERIALS

Motor housing	Cast Iron EN-GJL-250
Pump housing	Cast Iron EN-GJL-400
Propeller blades	Stainless Steel 1.4517
Motor shaft	Stainless Steel 1.4021

motralec ★★★★★ 4,8/5 . +600 avis

4 rue Lavoisier, 95220 Herblay-sur-Seine . Tél. 01 39 97 65 10 . service-commercial@motralec.com . www.motralec.com

motralec

Expert en pompes, moteurs électriques et ventilateurs industriels depuis 1976.
Herblay-sur-Seine (95) . Sèvres (92) . Étréchy (91) . www.motralec.com

Besoin d'un prix ou d'un conseil technique ?

Pompe Homa HELICES

★★★★★ 4,8/5 . +600 avis

- Devis rapide et conseil technique par nos spécialistes
- Plus de 200 000 références et 30 marques distribuées
- Vente, réparation, bobinage et SAV en atelier
- Livraison partout en France, accompagnement avant et après-vente

Voir la gamme Homa sur notre site :

www.motralec.com/.../homa

DEMANDE DE PRIX >