www.greaseguardian.com





Custom design unit available on request

TRAPS AND REMOVES FATS, OILS & GREASE ON MARINE VESSELS

- Stainless steel fabrication in SS316
- Traps and removes fats, oil & grease on Marine Vessels
- Intelligent design
- Automatically removes 99% of grease and food waste
- Self cleaning facility
- Product ranges from 1L to 20L per second
- Easy to install and maintain, BMS remote monitoring
- Full customer support

CE INVESTORS IN PEOPLE ims OHSAS 18001 certified ims OHSAS 9001 certified ims ISO 14001 certified UKAS BS EN ISO 9001 : 2008

www.fmenvironmental.com

FM ENVIRONMENTAL

Products layout and combinations

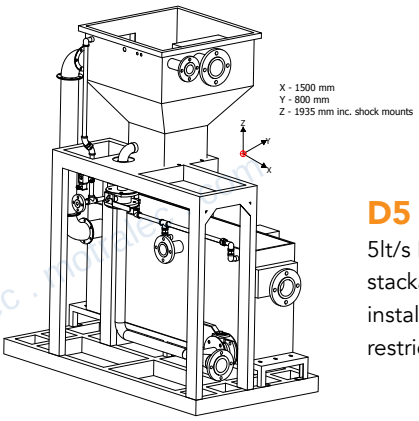

D5
5lt/s In line or stackable for easy installation in restricted space



D10
10lt/s In line ASRD unit

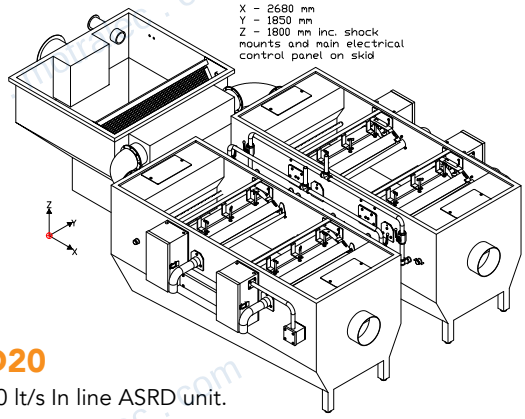

D20
20 lt/s In line ASRD unit.

FOUR-STAGE OPERATION SYSTEM

STAGE 1 Solids Filtration and Transfer (ASRD)
Kitchen waste water enters the unit and any large food particles are trapped by a large screen based in the hopper , where they settle at the bottom. The liquid waste now free of solids continues into the main tank. The settled solids are periodically pumped away by pump into a secondary tank on board for storage (usually available on the ship).

STAGE 2 Grease Trapped
After entering the main tank grease which is lighter than water separates naturally and remains trapped. The heavier clean water leaves the tank under a baffle before being discharged to drain.

STAGE 3 Grease Removal Programme
A pre-programmed removal cycle starts by first agitating the trapped grease waste using diffused air. This helps suspended grease globules to further separate and directs the waste towards the skimming mechanism. The waste is then heated and the grease liquefies. The liquefied grease is then skimmed and transferred to external receptacles to await recycling.

STAGE 4 Self Cleaning
A wash down system is automatically activated to ensure the system remains clean.

OTHER FEATURES

- Grease waste can be recycled or sold
- Service log and reminder alarms as standard
- Compact modularized system that can be disassembled for easy transport on board with possibility of stackable version, skid mounted, with manual or automatic solid removal options
- Designed to limit smell, avoid spillages, in 316 SS 16 and 14 gauge according to the model.

MRREV-1

Manufacturers
FM Environmental
Greenbank Industrial Estate
Newry BT34 2QX
Northern Ireland
T: +44(0)28 302 66616
F: +44(0)28 302 63233
E: sales@greaseguardian.com

Malta
FM Environmental (Malta) Ltd
Water Technology House
A15B Industrial Estate
Marsa, Malta
T: +356 2122 6172
F: +356 2122 6171
E: fmmalta@fmenvironmental.com

Authorised distributor:

Grease Guardian® Frontline Engineering

motralec ★★★★★ 4,8/5 . +600 avis
4 rue Lavoisier, 95220 Herblay-sur-Seine . Tél. 01 39 97 65 10 . service-commercial@motralec.com . www.motralec.com

Besoin d'un prix ou d'un conseil technique ?

Grease Guardian D20

4,8/5 . +600 avis

- Devis rapide et conseil technique par nos spécialistes
- Plus de 200 000 références et 30 marques distribuées
- Vente, réparation, bobinage et SAV en atelier
- Livraison partout en France, accompagnement avant et après-vente

Voir la gamme Grease Guardian sur notre site :

www.motralec.com/grease-guardian

DEMANDE DE PRIX >