motralec
4 rue Lavoisier . ZA Lavoisier . 95223 HERBLAY CEDEX
Tel. : 01.39.97.65.10 / Fax. : 01.39.97.68.48
Demande de prix / e-mail : service-commercial@motralec.com
www.motralec.com

TRAVAINI PUMPS USA

Liquid Ring & Rotary Vane Vacuum Pumps and System

TRHC 40

Two Stage High Vacuum Pump

PERFOMANCE DATA	: From 25 Torr	CAPACITY:	40 – 130 cfm
FEATURES	: Two-stage rotating pump with externally located bearings grease lubricated.		
SHAFT SEALING	: Mechanical seal - Double mechanical seal – Packing seal.		
OPTIONS	: Bareshaft pump - Coupled to electric motor on baseplate – Monoblock with electric motor		

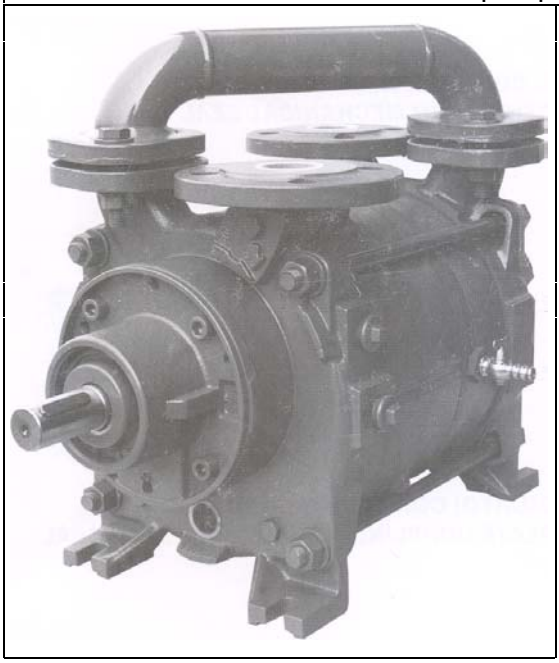

TECHNICAL DATA

PUMP TYPE		TRHC* 40-110		TRHC* 40-140		TRHC* 40-190	
Speed	RPM	1450	1750	1450	1750	1450	1750
Motor - installed power	HP	5	7.5	5	7.5	7.5	10
Average service liquid flow	GPM	3.5	3.5	3.5	3.5	4.0	4.0
Noise level at 60 Torr	dB(A)	65	68	65	68	65	68
Minimum suction pressure	Torr	25	25	25	25	25	25

Pumps are provided with threaded connections for service liquid, pump draining, anticavitation valve, and companion flanges for TRHC 40-110. Pumps are also provided, by request, with auxiliary threaded connections, flanged air-liquid separator tank, non return valve, vacuum relief valve,
valve to control the flow of the liquid supply, vacuum gauges, pressure gauges and compound gauges.
We can also provide information on our water sealed and oil sealed systems.
For more detailed information please contact our Sales Office.

Example for Model Designation

T R H C 40 – 140 / C - M / GH

T	Travaini Pump USA construction
R	Liquid Ring Pump
H	Two stage pump for high vacuum
C	Design number
40	Flange size (mm)
140	Nominal capacity (m^3/h)
C	Shaft sealing C = Mechanical seal C2 = Double mechanical seal B = Packing seal
M	Closed-coupled construction with lantern
GH	Materials of construction GH-F-RA-A3 = See table

Standard Materials of Construction

Part No.	Description	GH	F	RA	A3
106	Suction casing	Cast Iron			
107	Discharge casing				
140	Port plate				
110	Impeller housing	Carbon Steel			
210	Shaft	Stainless Steel AISI 420		Stainless Steel AISI 316	
147	Manifold	Steel			
357	Bearing housing mech. seal	Cast Iron			
230	Impeller	Bronze	Ductile Iron	Stainless Steel AISI 316	

Special Materials Available Upon Request

*"E" design version available upon request
Indicative table: for further information please consult our Sales Office

March 1, 2002

TRAVAINI PUMPS USA

Liquid Ring & Rotary Vane Vacuum Pumps and System

DATA BASED ON :

DRY AIR AT 68 °F – 20 °C ————

SATURATED AIR AT 68 °F – 20 °C - - - - - - - -

SERVICE LIQUID WATER

SERVICE LIQUID TEMPERATURE 59 °F – 15 °C

DISCHARGE PRESSURE 1013 mbar

S.S. PUMPS

CAPACITY : –10%

Tol.: 10%

PERFORMANCE DATA

LIQUID RING VACUUM PUMP

PUMP MODEL

TRHC 40–110

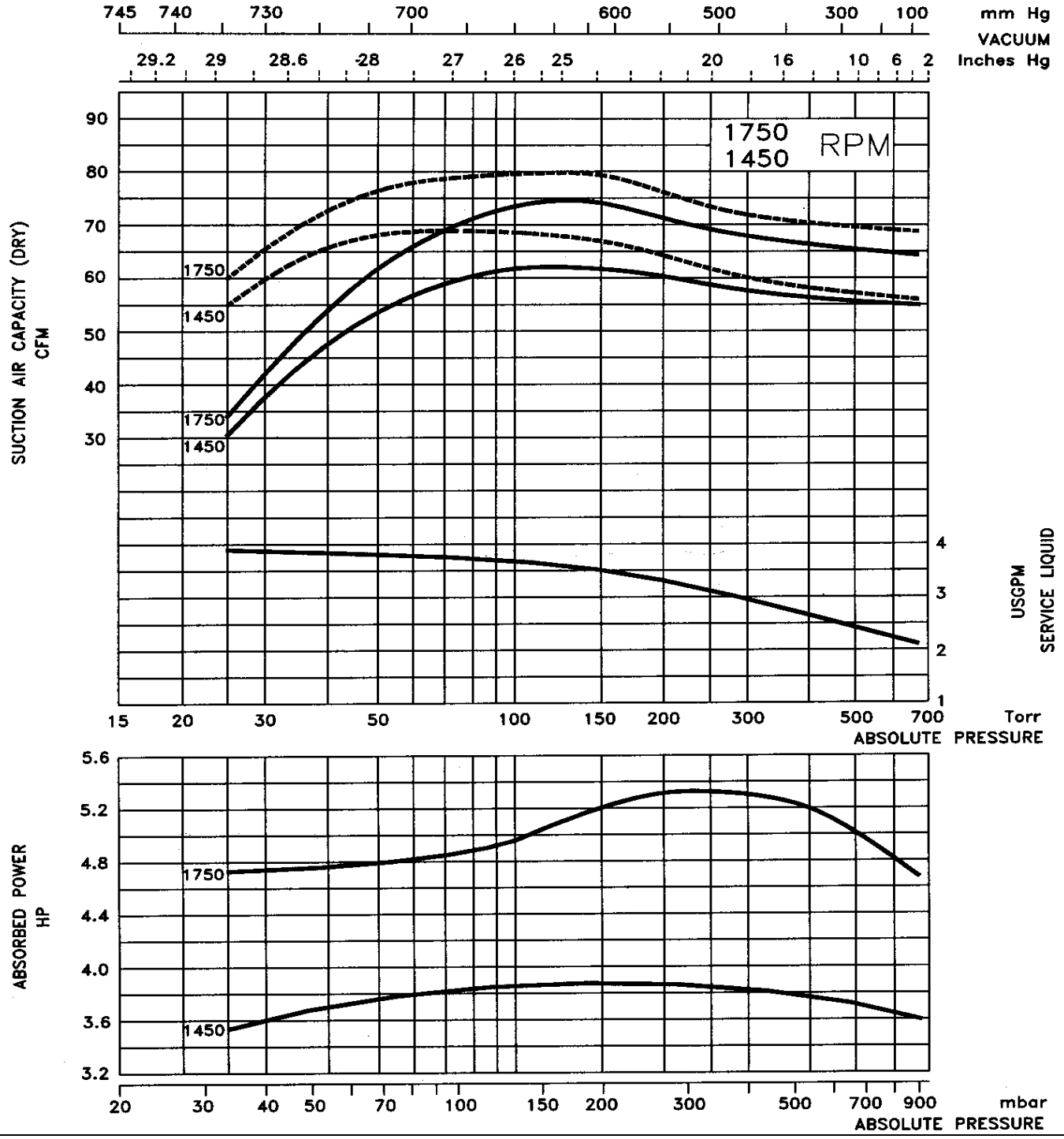

March 1, 2002

TRAVAINI PUMPS USA

Liquid Ring & Rotary Vane Vacuum Pumps and System

DATA BASED ON :

DRY AIR AT 68 °F – 20 °C

SATURATED AIR AT 68 °F – 20 °C

SERVICE LIQUID WATER

SERVICE LIQUID TEMPERATURE 59 °F – 15 °C

DISCHARGE PRESSURE 1013 mbar

S.S. PUMPS

CAPACITY : –10%

Tol.: 10%

PERFORMANCE DATA

LIQUID RING VACUUM PUMP

PUMP MODEL

TRHC 40–140

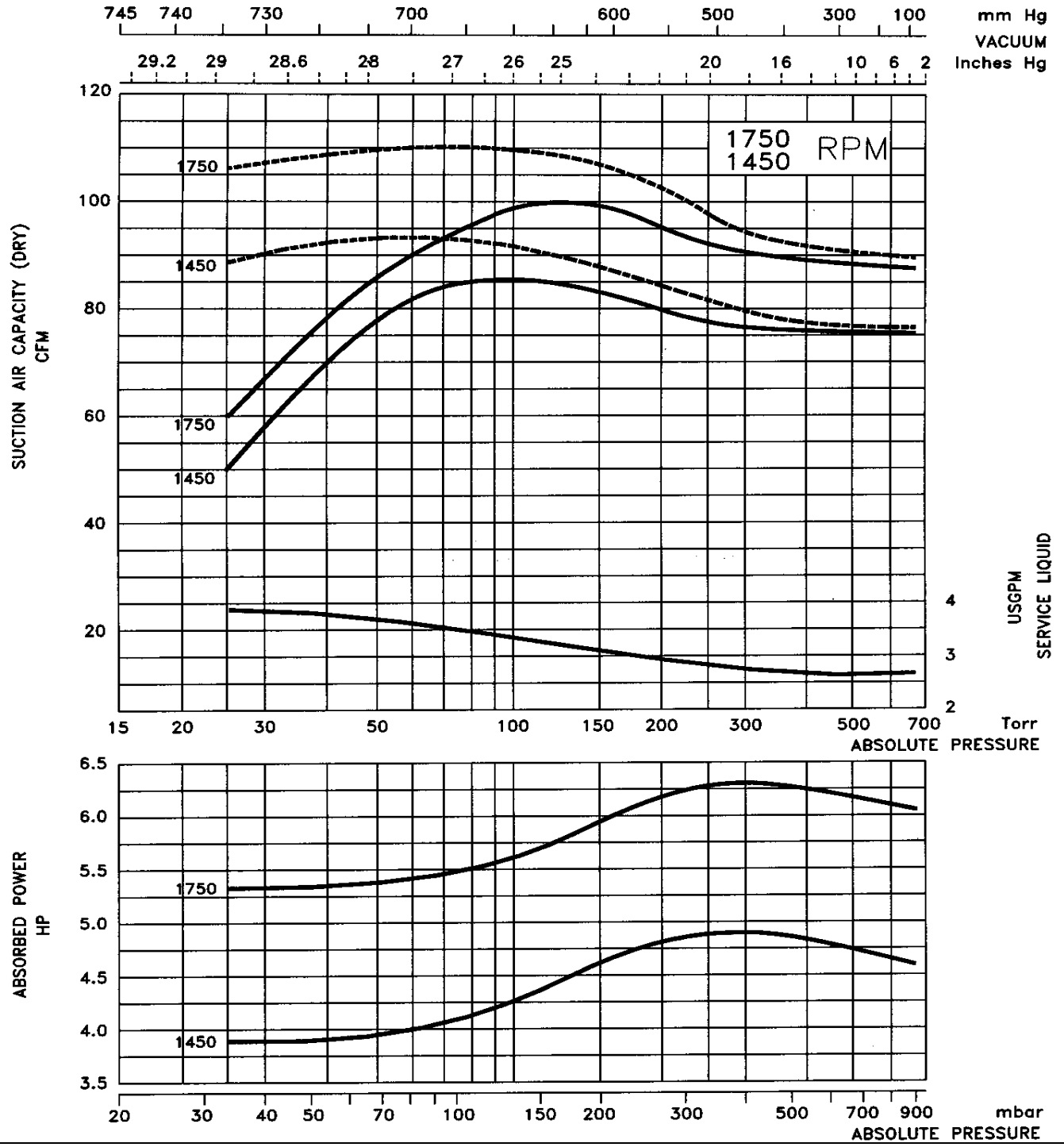

March 1, 2002

TRAVAINI PUMPS USA

Liquid Ring & Rotary Vane Vacuum Pumps and System

DATA BASED ON :

DRY AIR AT 68 °F – 20 °C

SATURATED AIR AT 68 °F – 20 °C

SERVICE LIQUID WATER

SERVICE LIQUID TEMPERATURE 59 °F – 15 °C

DISCHARGE PRESSURE 1013 mbar

S.S. PUMPS

CAPACITY : –10%

Tol.: 10%

PERFORMANCE DATA

LIQUID RING VACUUM PUMP

PUMP MODEL

TRHC 40–190

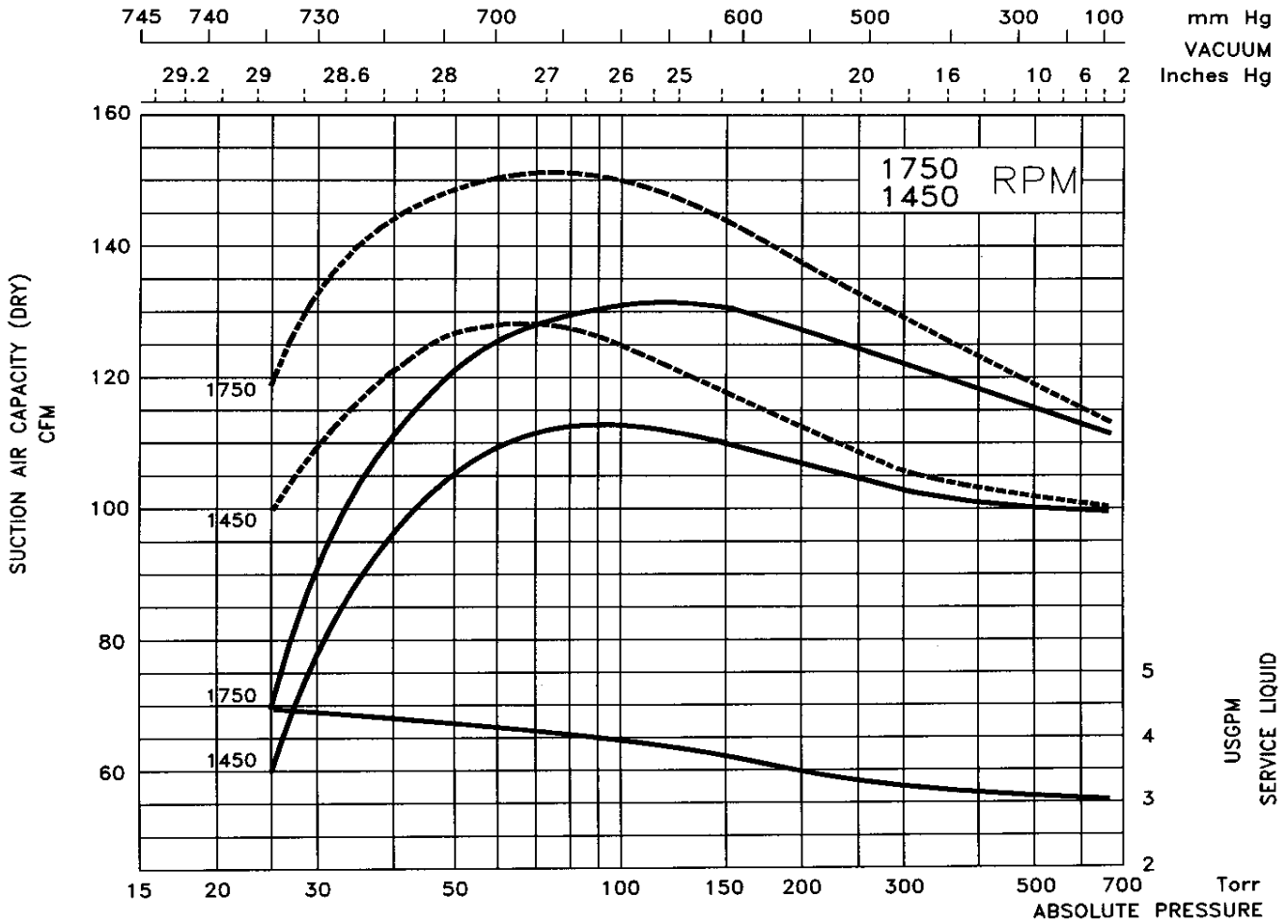

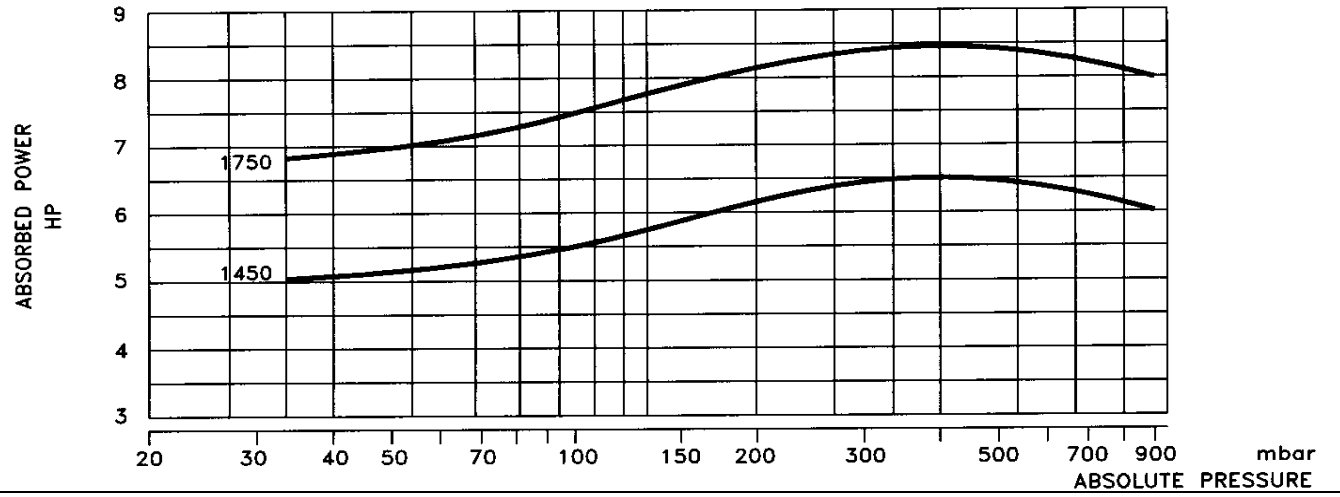

March 1, 2002

TRAVAINI PUMPS USA

Liquid Ring & Rotary Vane Vacuum Pumps and System

TRHC 40-110/C

Bareshaft Construction with Mechanical Seals

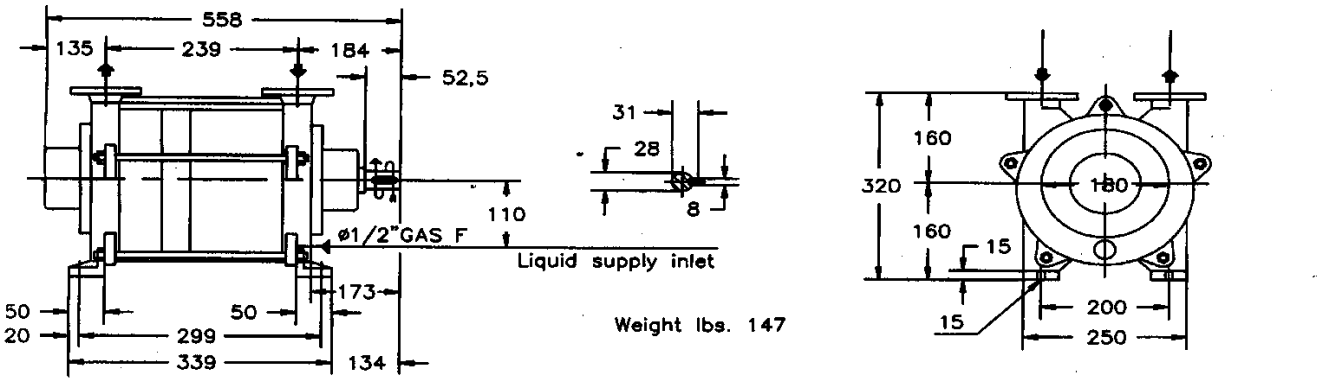

Flanges according to UNI 2223–2229–NP 10

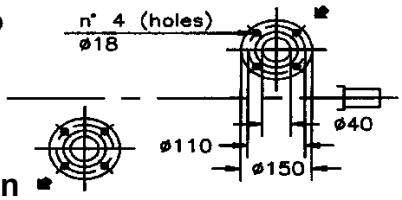

4 Poles Motor	Pump			Weight lbs. ①
HP	E1	G1	L1	
5	547	186	258	174
7.5	568	210	279	185

Close-Coupled Construction with Mechanical Seals

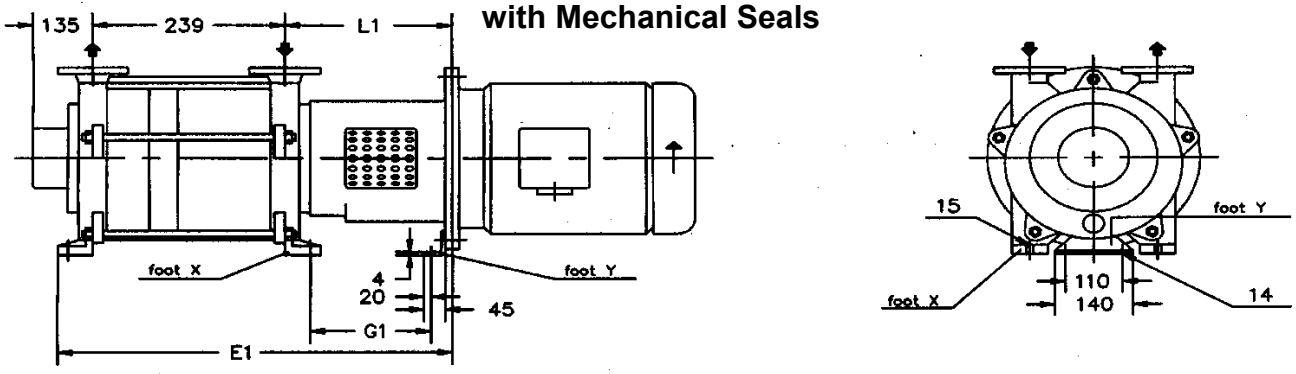

Base-mounted Construction (Baseplate-Coupling) with Mechanical Seals

4 Poles Motor	Pump									Weight lbs. ①
HP	A	B	C	D	E	F	G	P	Q	
5	770	350	290	125	420	175	320	220	380	202
7.5	960	370	310	70	600	180	340	225	385	231

① Weight without motor

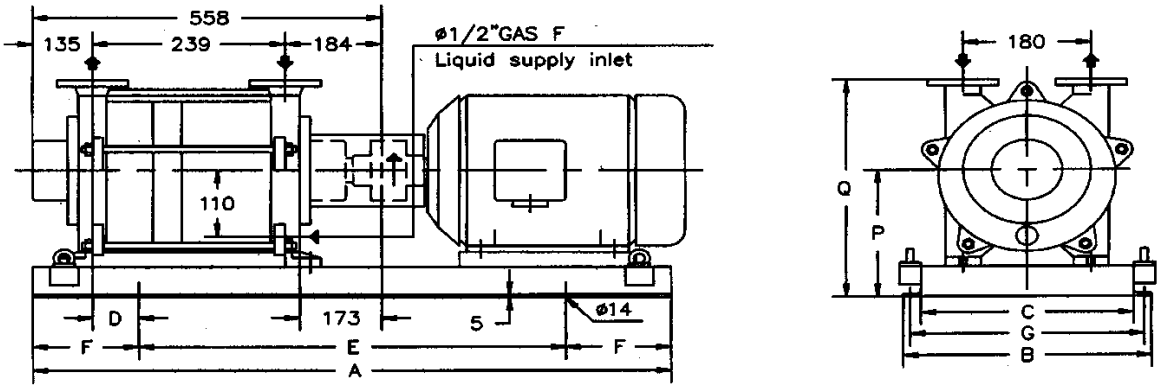

Schematic drawing – Dimensions in mm, weights in kgs. not binding

Note: Dimensions in mm $\frac{\text{mm.}}{25.4}$ = inches

March 1, 2002

TRAVAINI PUMPS USA

Liquid Ring & Rotary Vane Vacuum Pumps and System

TRHC 40-140/c, 190/C
Bareshaft Construction with Mechanical Seals

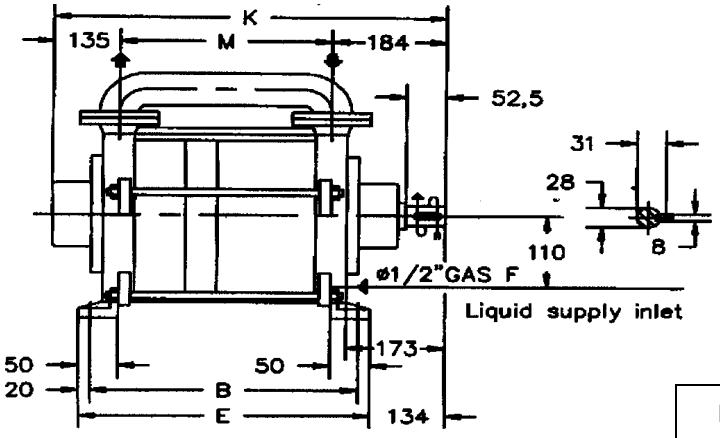

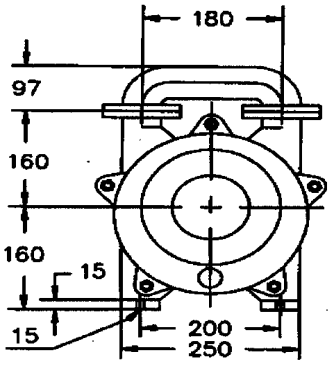

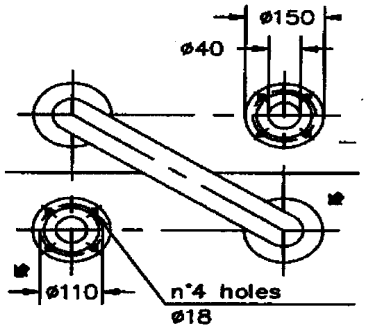

Pump Type	B	E	M	K	Weight lbs.
TRHC 40-140/C	329	369	269	588	174
TRHC 40-190/C	399	439	339	658	192

Close-Coupled Construction with Mechanical Seal

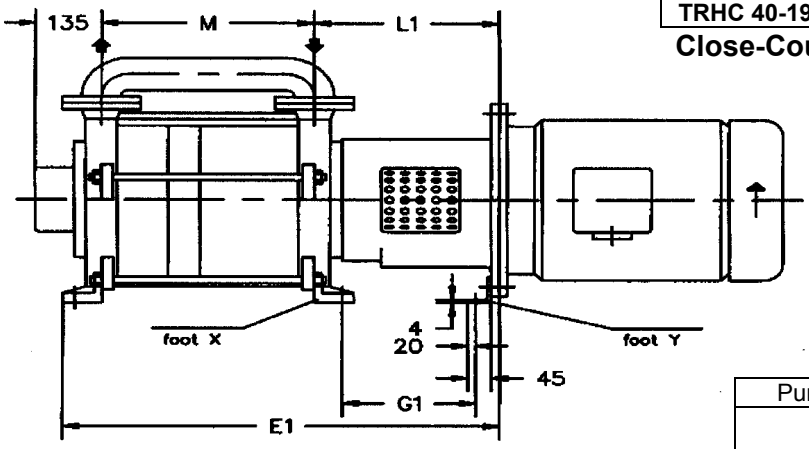

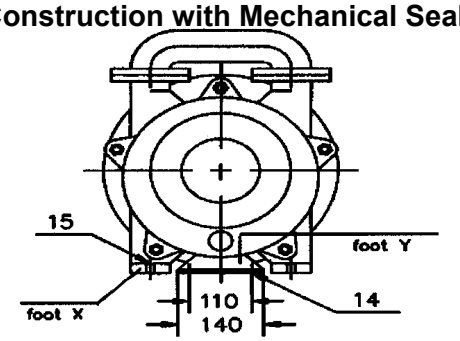

Pump Type	4 Poles Motor	Pump				Weight lbs ①
	HP	E1	G1	L1	M	
TRHC 40-140/C	5	577	186	258	269	194
	7.5	598	210	279		207
	10					
TRHC 40-140/C	7.5	668			339	231
	10					

Base-Mounted Construction (Baseplate-Coupling) with Mechanical Seal

Pump Type	4 Poles Motor	Pump			Weight lbs ①
	HP	D	K	M	
TRHC 40-140/C	5	50	588	269	262
	7.5	90			284
	10				
TRHC 40-140/C	7.5	130	658	339	302
	10				

① Weight without motor

Note: Dimensions in mm

mm. ------ = inches
25.4

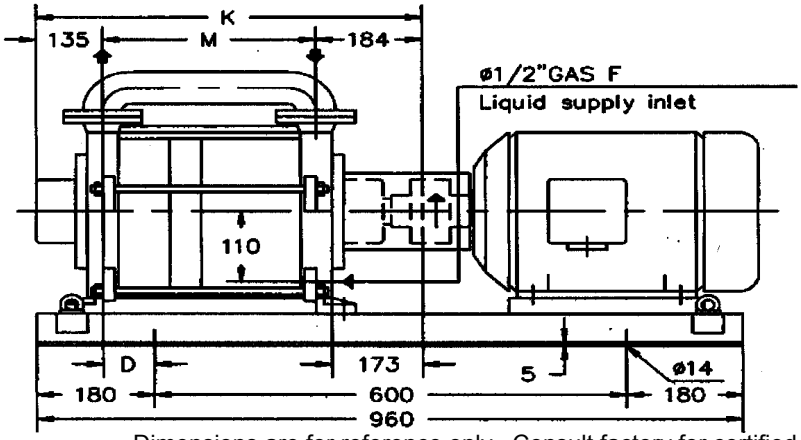

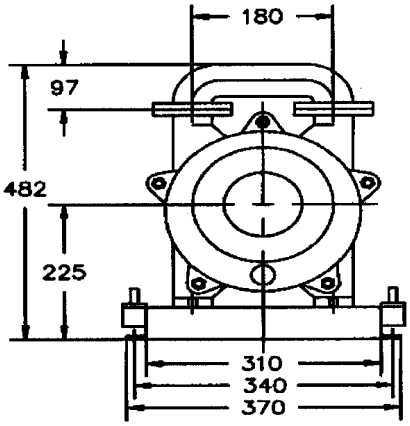

Dimensions are for reference only. Consult factory for certified drawings.
Schematic drawing – Dimensions in mm. And weights in lbs. not binding

March 1, 2002

Typical Cross Section with Mechanical Seal
TRHC 40 - 110/C

motralec
4 rue Lavoisier . ZA Lavoisier . 95223 HERBLAY CEDEX
Tel. : 01.39.97.65.10 / Fax. : 01.39.97.68.48
Demande de prix / e-mail : service-commercial@motralec.com
www.motralec.com

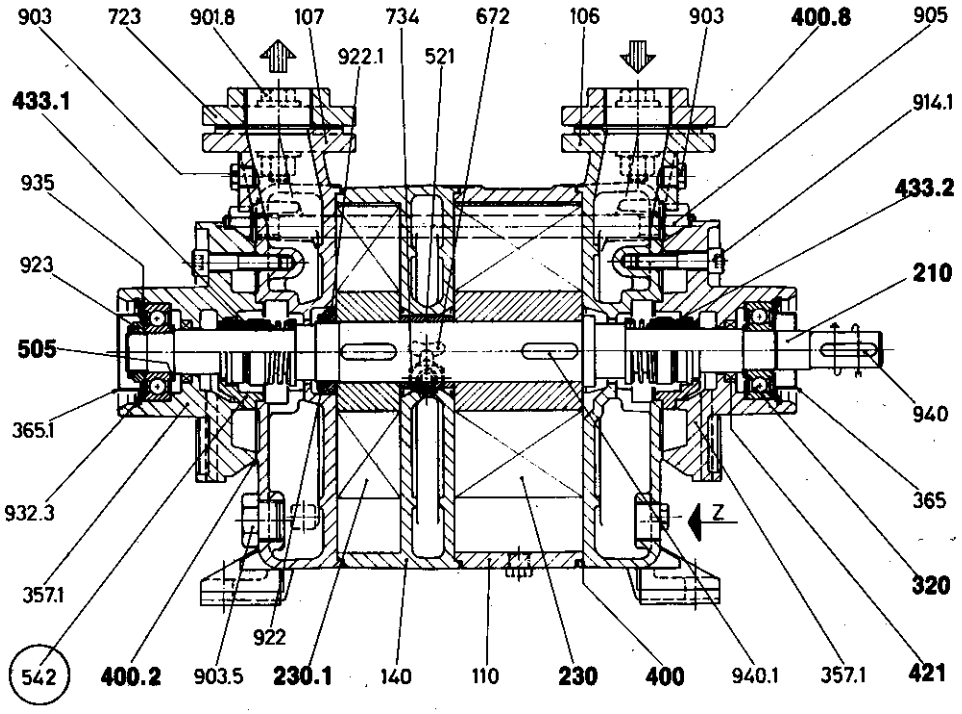

COMPONENTS

VDMA No.	DESCRIPTION
106	Suction casing
107	Discharge casing
110	Impeller casing
140	Intermediate element
147	Manifold
• 210	Shaft
• 230	Impeller
• 230.1	Impeller
• 320	Ball bearing
357	Bearing and mech. seal housing
357.1	Bearing and mech. seal housing
360.1	Bearing cover
365	Bearing cover
365.1	Bearing cover
• 400	Gasket
• 400.2	Gasket
• 400.8	Gasket
• 421	Radial seal ring
• 433.1	Mechanical seal c.c.w.
• 433.2	Mechanical seal c.w.
485	Mechanical seal locking ring
• 505	Shoulder ring
521	Spacer sleeve
542	Seal bush (A3 construction only)
672	Anticavitation valve
723	Companion flange
734	Fitting
901	Screw
901.8	Bolt
903	Plug
903.5	Plug
903.6	Plug
903.7	Plug
905	Tie-bolt
914	Screw
914.1	Screw
922	Nut
923	Nut
932.3	Circlip
935	Elastic ring
940	Key
940.1	Key
Z	Liquid supply inlet

◯ = A3 construction only

• = Recommended spare parts

Typical Cross Section with Mechanical Seals
TRHC 40 - 140/C, 190/C

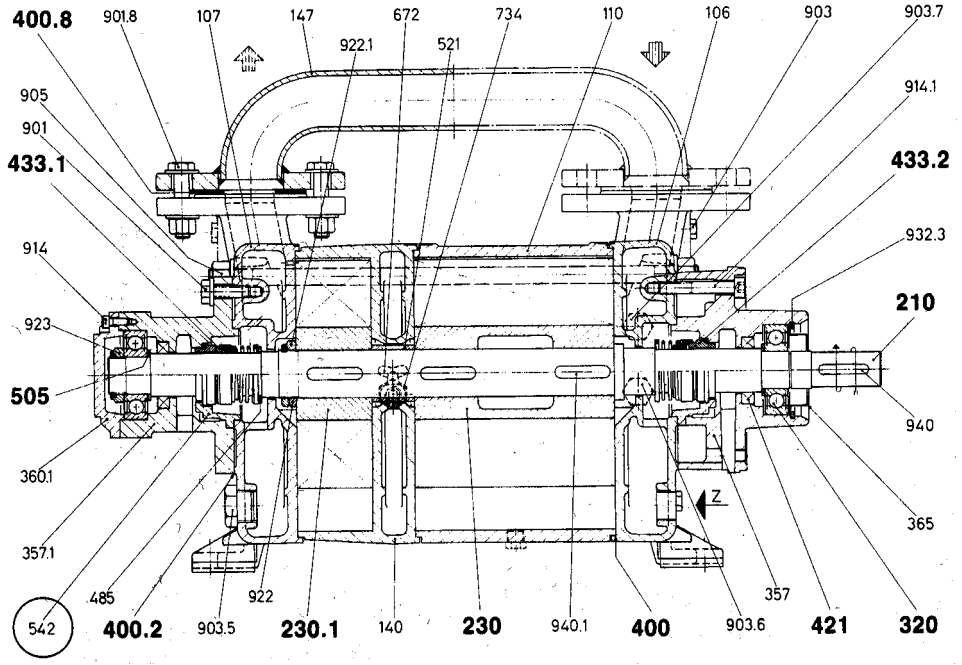

March 1, 2002