motralec
4 rue Lavoisier . ZA Lavoisier . 95223 HERBLAY CEDEX
Tel. : 01.39.97.65.10 / Fax. : 01.39.97.68.48
Demande de prix / e-mail : service-commercial@motralec.com
www.motralec.com

GRUNDFOS **LIVRET TECHNIQUE**

Documentation à venir

MAGNA (D) / UPE(D)

Série 2000

Circulateurs électroniques
50/60 Hz

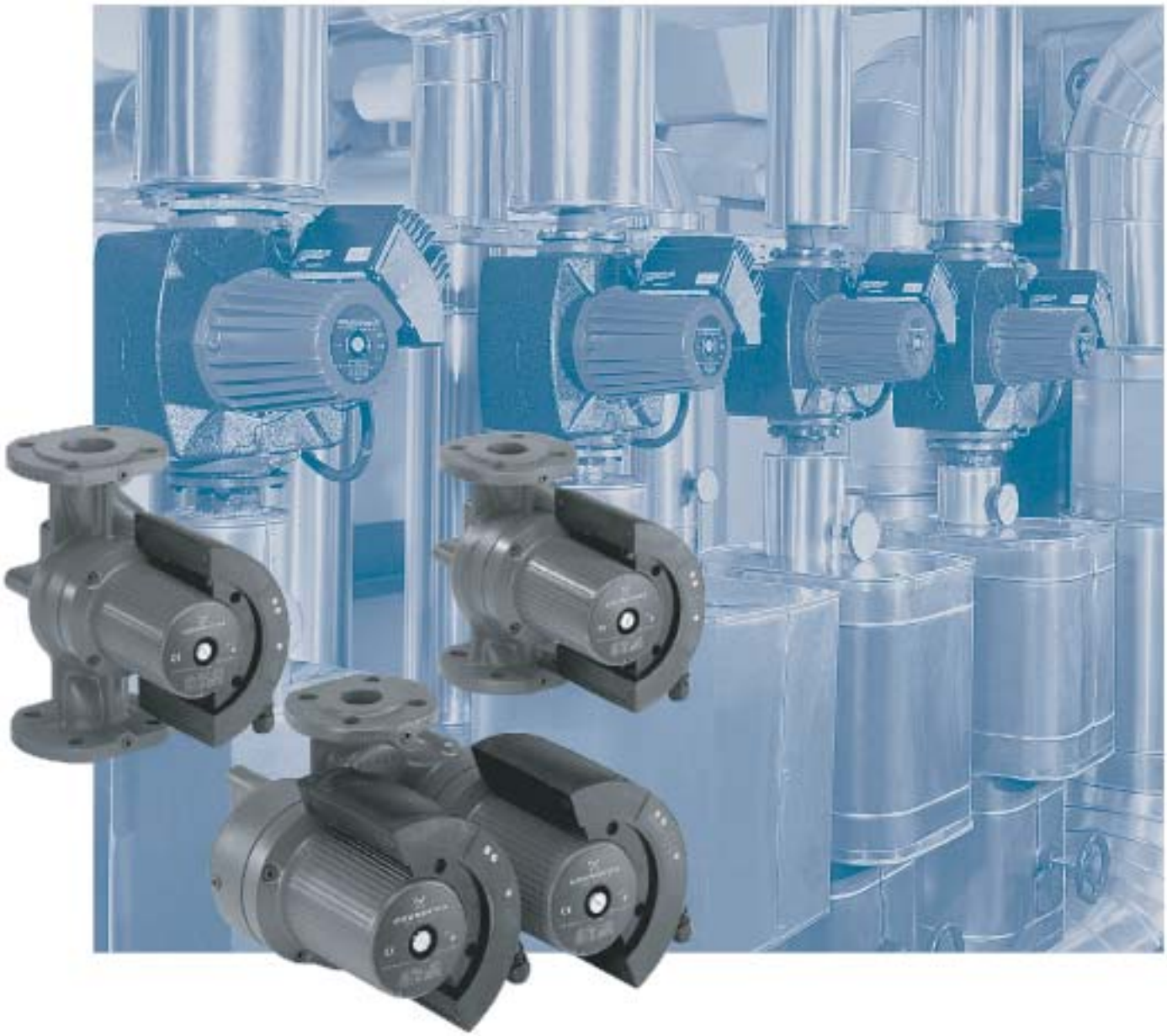

motralec . 4 rue Lavoisier . ZA Lavoisier . 95223 HERBLAY CEDEX. Tel. : 01.39.97.65.10 / Fax. : 01.39.97.68.48
Demande de prix / e-mail : service-commercial@motralec.com . Site Internet : www.motralec.com

BE > THINK > INNOVATE >

GRUNDFOS

MAGNA/UPE Series 2000

The MAGNA/UPE Series 2000 range is especially designed for:

- heating systems up to 2100 kW (÷t = 20°C) and
- domestic hot water systems (stainless steel or bronze pump housing).

Duty range

Maximum system pressure:	10 bar#
Liquid temperature:	+15°C to +110°C#
Max. flow, Q:	90 m^3/h#
Max. head, H:	12 m.

GR6460

Performance range, MAGNA (D), UPE(D)

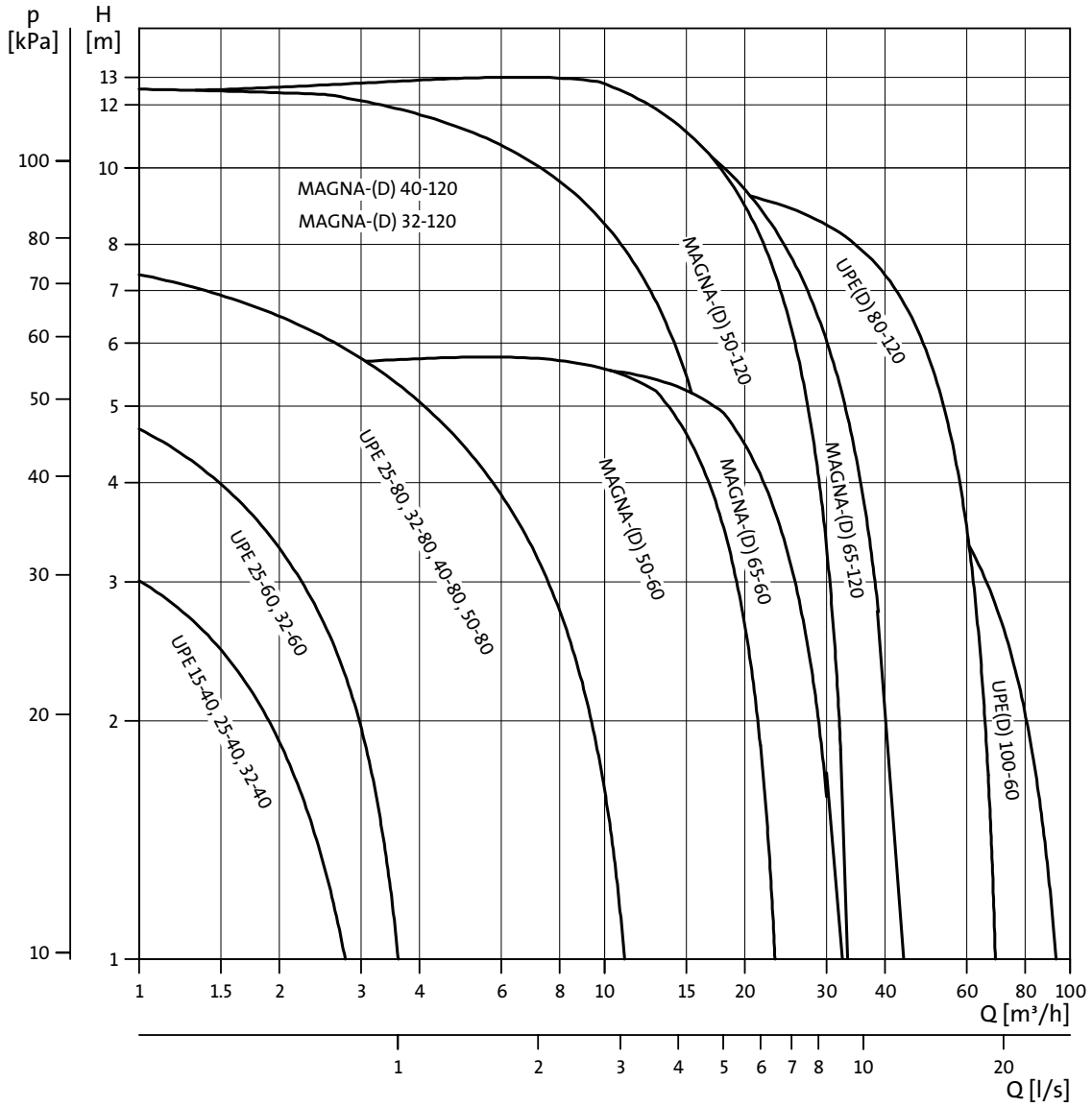

TM02 2079 2204

MAGNA 32-120 F

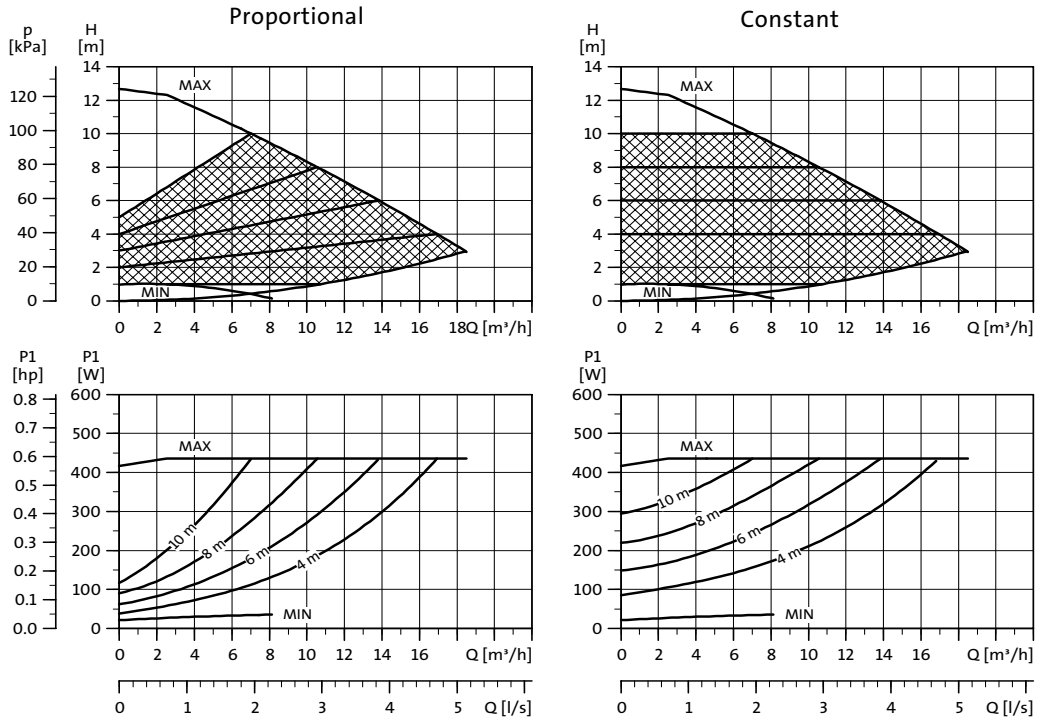

TM02 1910 2204

Electrical data

U_n [V]		P_1 [W]	I_n [A]
1 x 230-240 V	Min.	25	0.17
	Max.	430	1.8

MAGNA 32-120 F is also available with stainless housing, type N.

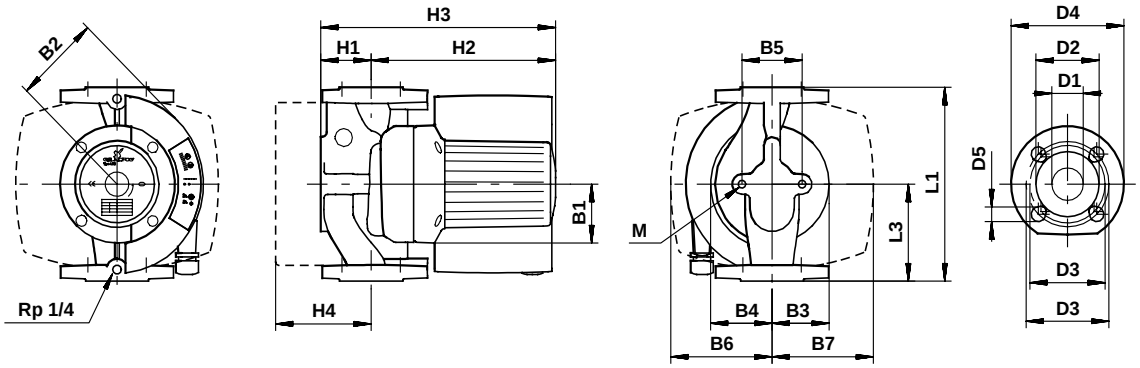

TM02 0239 5101

Dimensions and weights

Pump type PN 6 / PN 10	Dimensions [mm]																			Weights [kg]		Ship. vol.
	L1	L3	B1	B2	B3	B4	B5	B6	B7	H1	H2	H3	H4	D1	D2	D3	D4	D5	M	Net	Gross	[m³]
MAGNA 32-120 F	220	110	77	115	75	76	96	110	110	68	245	310	86	32	76	90/100	140	14/19	M12	15	17	0.034

MAGNA 40-120 F

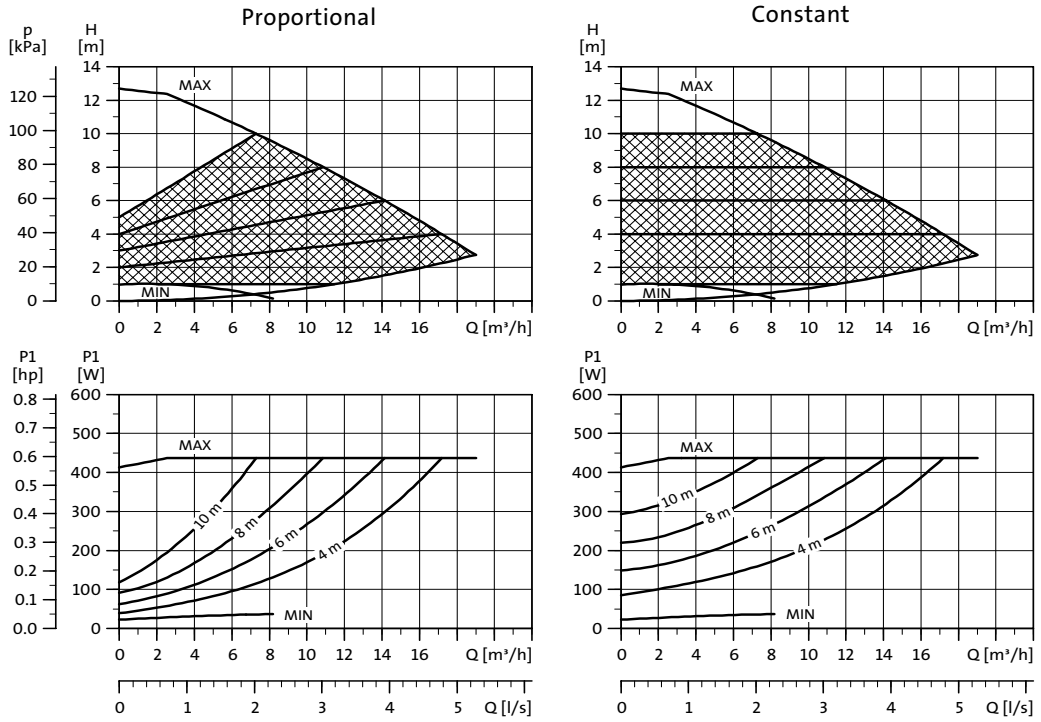

TM02 1911 2204

Electrical data

U_n [V]		P_1 [W]	I_n [A]
1 x 230-240 V	Min.	25	0.17
	Max.	450	2.0

MAGNA 40-120 F is also available with stainless housing, type N.

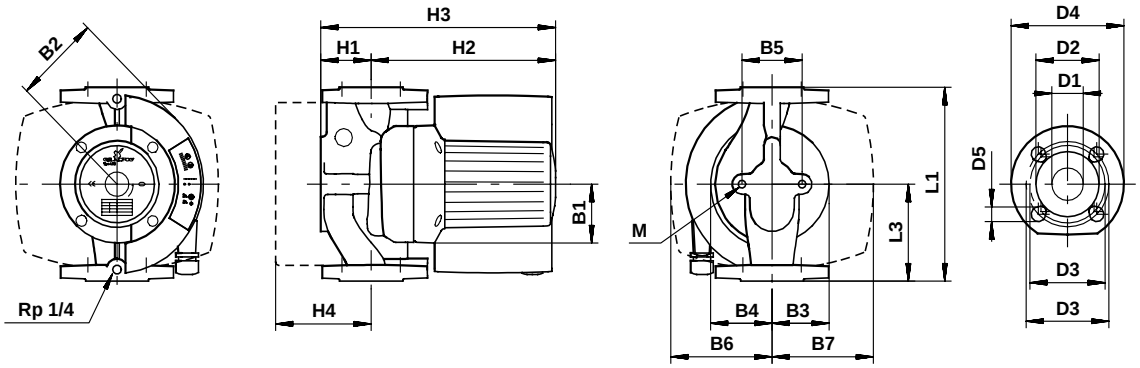

TM02 0239 5101

Dimensions and weights

Pump type PN 6 / PN 10	Dimensions [mm]																			Weights [kg]		Ship. vol.
	L1	L3	B1	B2	B3	B4	B5	B6	B7	H1	H2	H3	H4	D1	D2	D3	D4	D5	M	Net	Gross	[m³]
MAGNA 40-120 F	250	125	77	115	75	80	96	115	115	65	266	310	102	40	84	100/110	150	14/19	M12	15.5	17.5	0.034

MAGNA 50-60 F

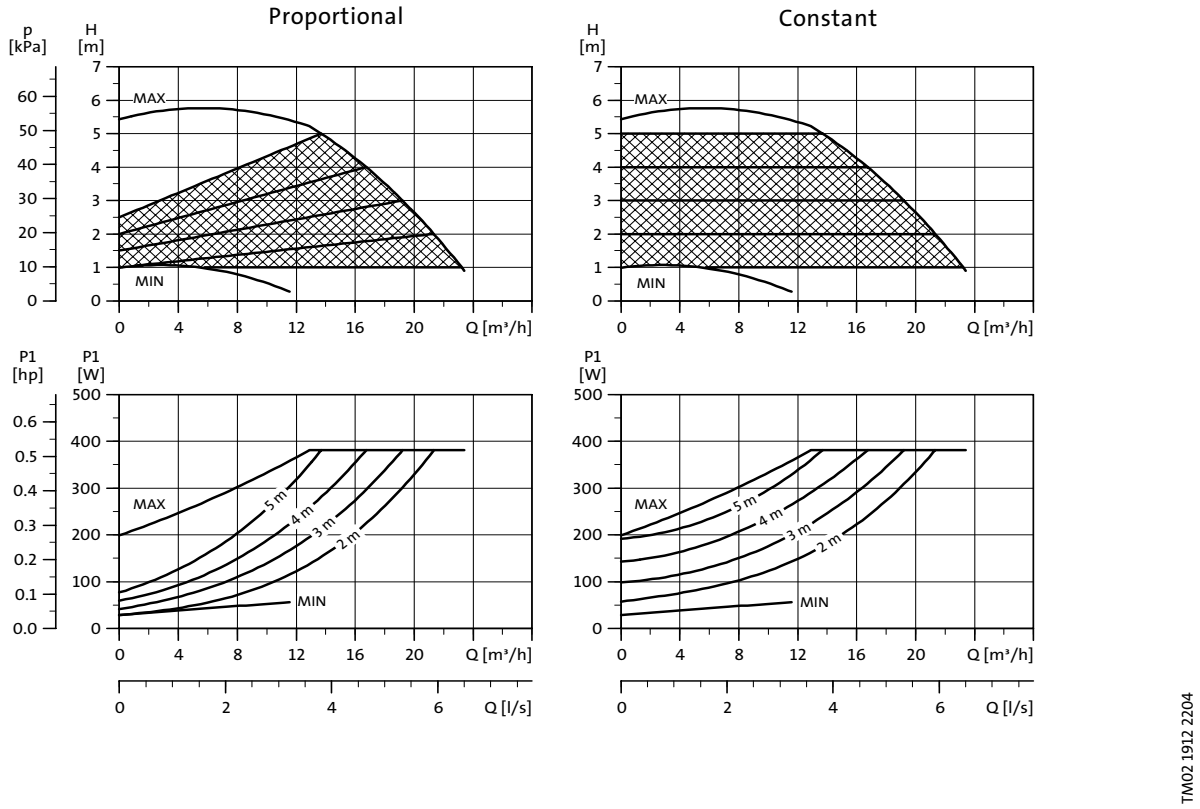

Electrical data

U_n [V]		P_1 [W]	I_n [A]
1 x 230-240 V	Min.	25	0.17
	Max.	400	1.7

MAGNA 50-60 F is also available with stainless housing, type N.

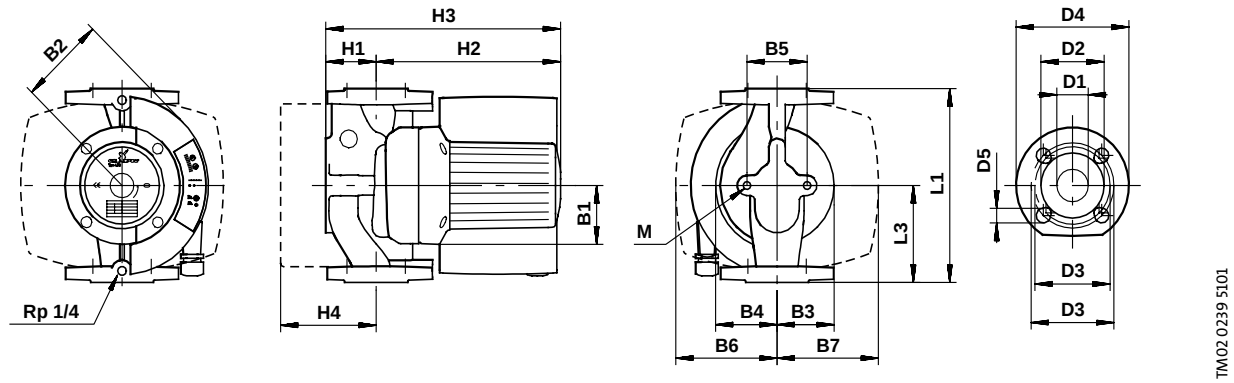

Dimensions and weights

Pump type PN 6 / PN 10	Dimensions [mm]																			Weights [kg]		Ship.vol.
	L1	L3	B1	B2	B3	B4	B5	B6	B7	H1	H2	H3	H4	D1	D2	D3	D4	D5	M	Net	Gross	[m³]
MAGNA 50-60 F	280	140	77	115	84	98	96	130	130	78	245	325	128	50	102	110/125	165	14/19	M12	18.5	20.5	0.043

MAGNA 65-60 F

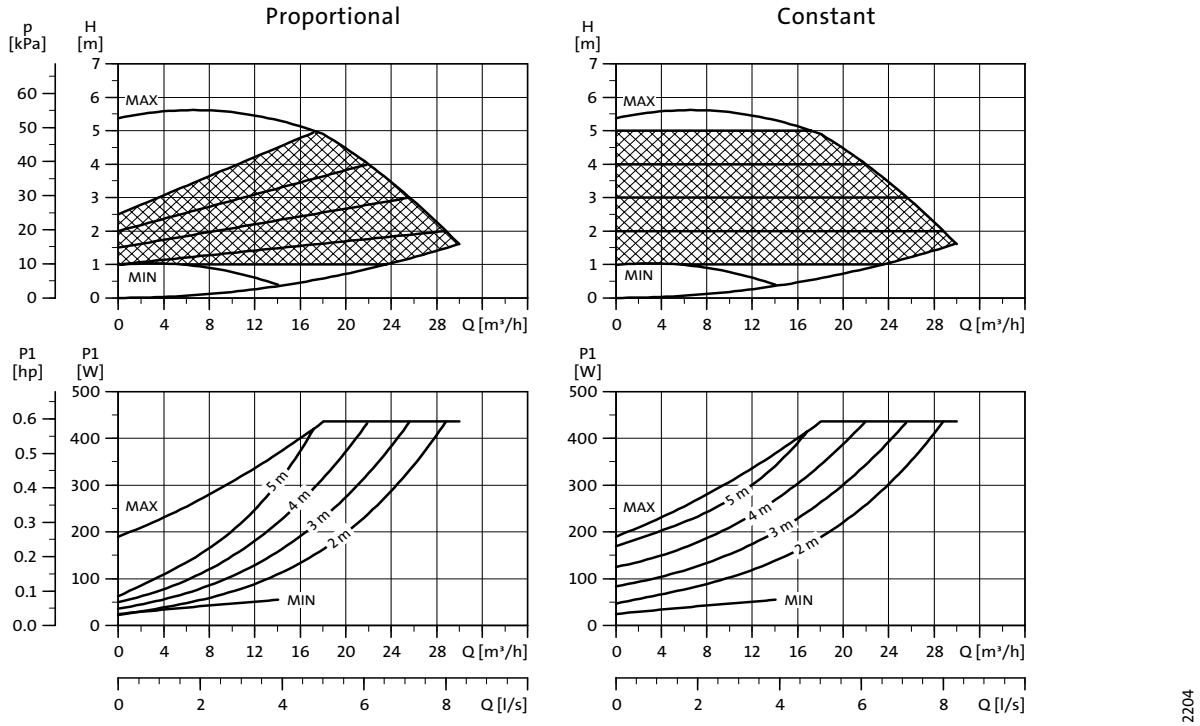

TM02 1913 2204

Electrical data

U_n [V]		P_1 [W]	I_n [A]
1 x 230-240 V	Min.	25	0.17
	Max.	450	2.0

MAGNA 65-60 F is also available with stainless housing, type N.

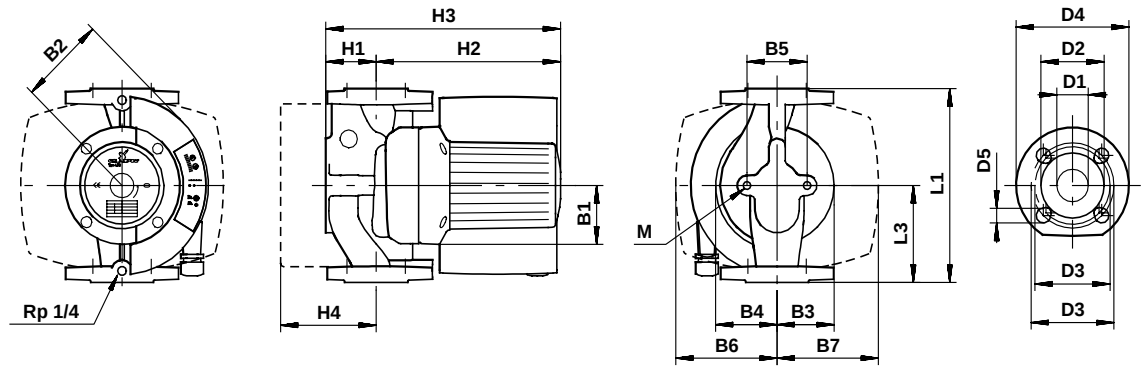

TM02 0239 5101

Dimensions and weights

Pump type PN 6 / PN 10	Dimensions [mm]																			Weights [kg]		Ship. vol.
	L1	L3	B1	B2	B3	B4	B5	B6	B7	H1	H2	H3	H4	D1	D2	D3	D4	D5	M	Net	Gross	[m³]
MAGNA 65-60 F	340	170	77	115	88	104	96	145	145	82	255	335	128	65	119	130/145	185	14/19	M12	22	24	0.043

MAGNA 50-120 F

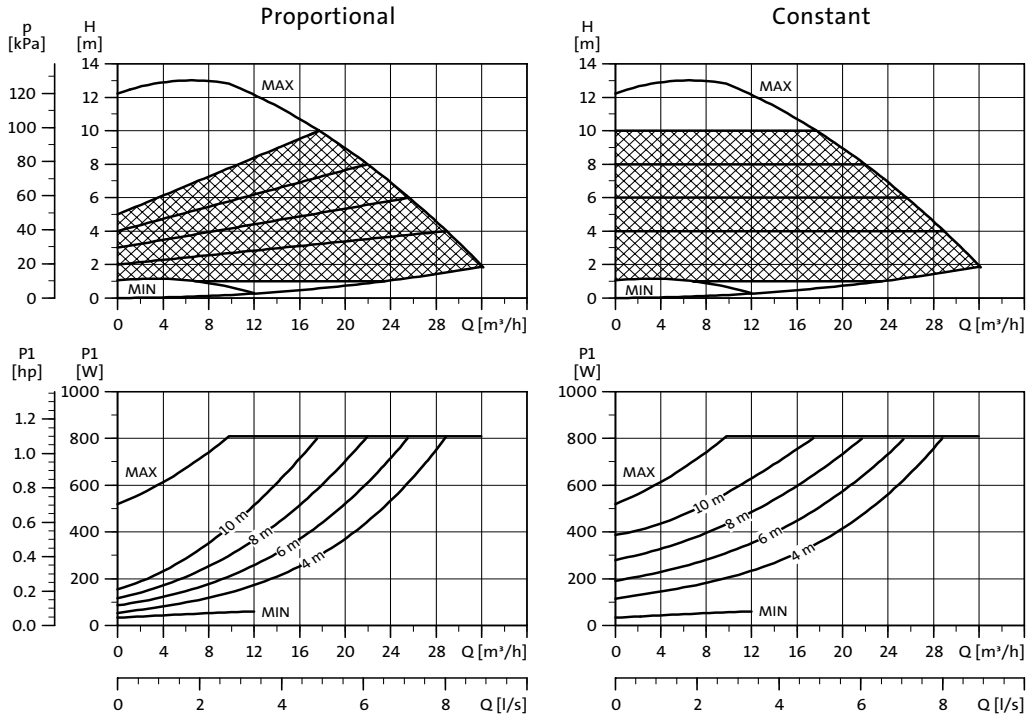

TM02 8814 2204

Electrical data

U_n [V]		P_1 [W]	I_n [A]
1 x 230-240 V	Min.	35	0.28
	Max.	800	3.5

MAGNA 50-120 F is also available with stainless housing, type N.

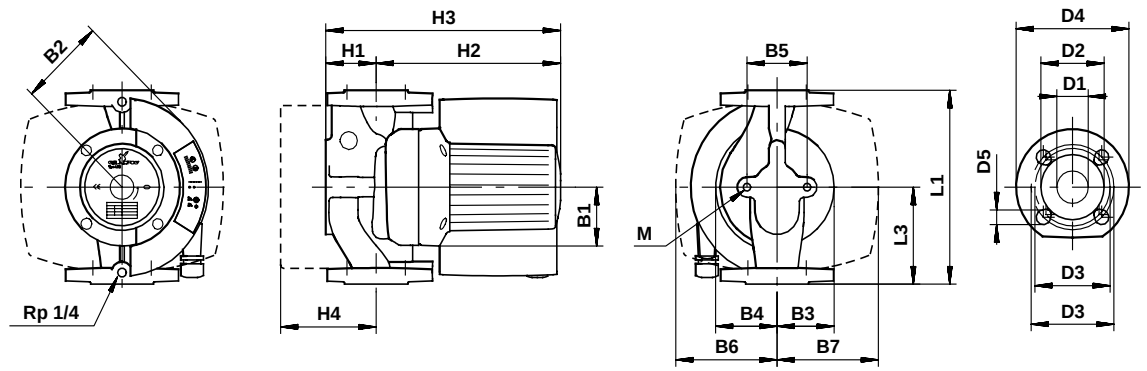

TM02 0239 5101

Dimensions and weights

Pump type PN 6 / PN 10	Dimensions [mm]																			Weights [kg]		Ship. vol.
	L1	L3	B1	B2	B3	B4	B5	B6	B7	H1	H2	H3	H4	D1	D2	D3	D4	D5	M	Net	Gross	[m³]
MAGNA 50-120 F	280	140	77	125	84	98	96	130	130	78	245	325	128	50	102	110/125	165	14/19	M12	22	24	0.043

MAGNA 65-120 F

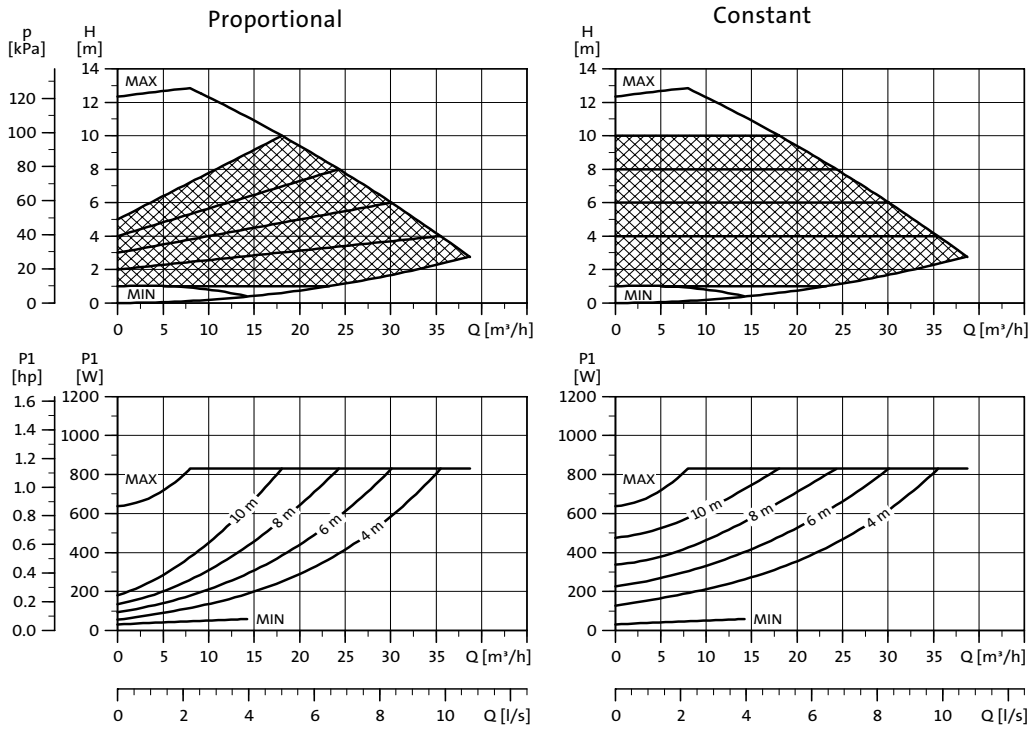

TM02 8815 2204

Electrical data

U_n [V]		P_1 [W]	I_n [A]
1 x 230-240 V	Min.	35	0.28
	Max.	900	3.9

MAGNA 65-120 F is also available with stainless housing, type N.

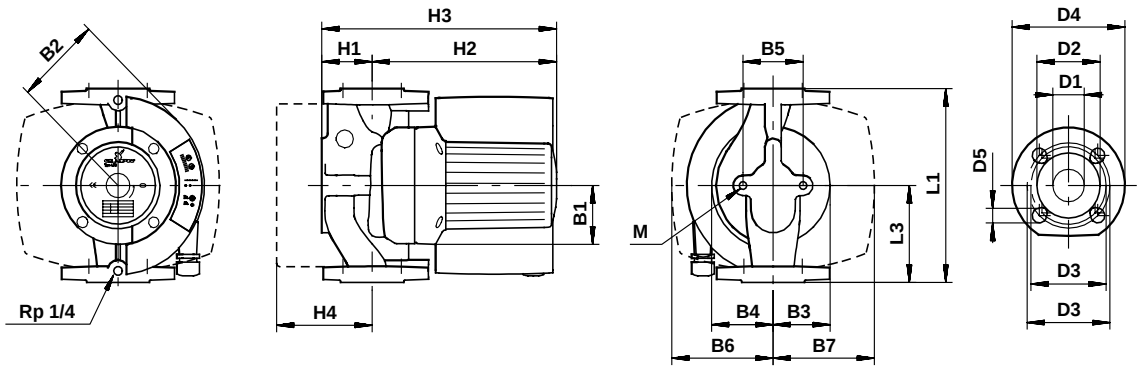

TM02 0239 5101

Dimensions and weights

Pump type PN 6 / PN 10	Dimensions [mm]																			Weights [kg]		Ship. vol.
	L1	L3	B1	B2	B3	B4	B5	B6	B7	H1	H2	H3	H4	D1	D2	D3	D4	D5	M	Net	Gross	[m³]
MAGNA 65-120 F	340	170	77	125	88	104	96	145	145	82	255	335	128	65	119	130/145	185	14/19	M12	25.5	27.5	0.043

UPE 80-120 F

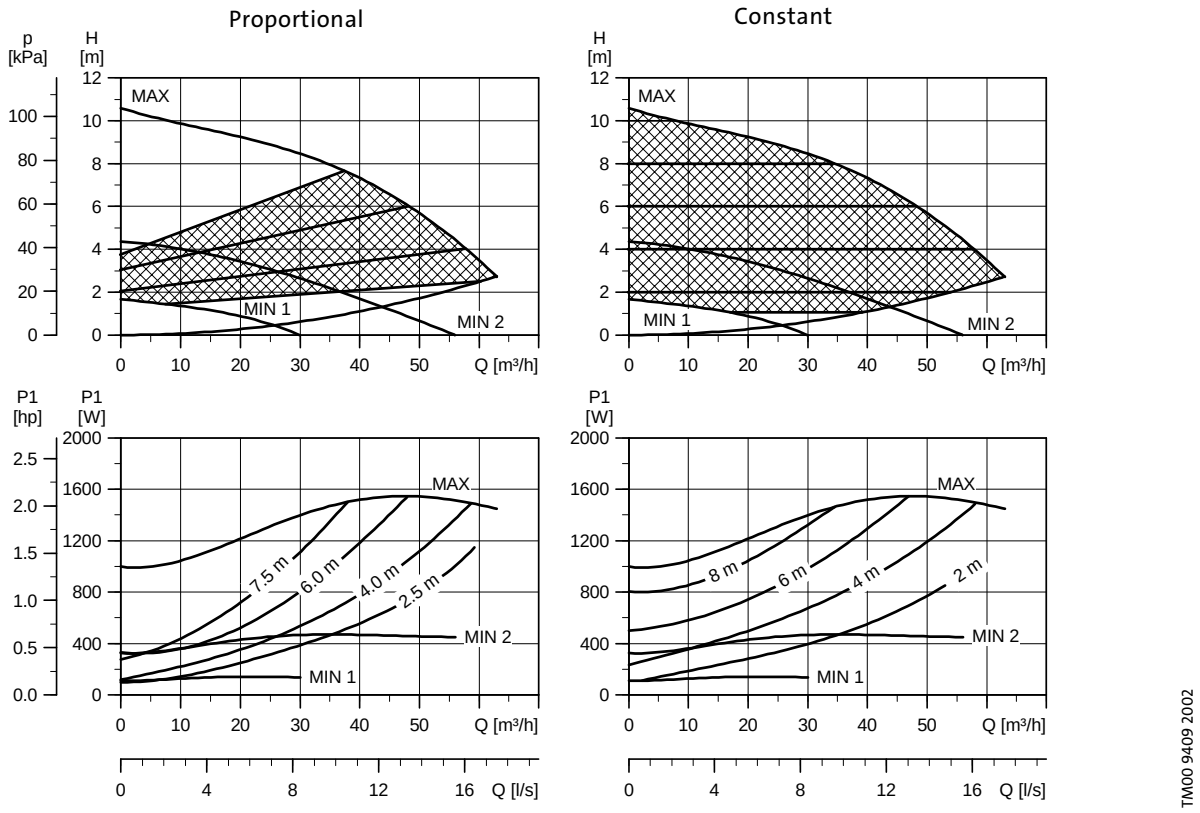

Electrical data

U_n [V]		P_1 [W]	I_n [A]
3 x 400-415 V	Min.	110	0.27
	Max.	1550	2.56

Also available with bronze housing, type B.

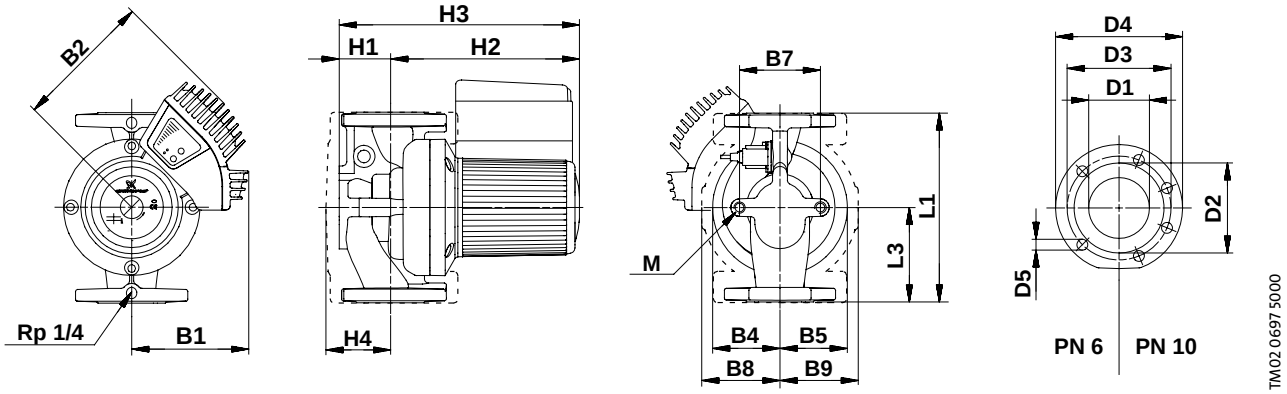

Dimensions and weights

Pump type	Dimensions [mm]																				Weights Î [kg]		Ship. vol.
	L1	L2	L3	B1	B2	B4	B5	B7	B8	B9	H1	H2	H3	H4	D1	D2	D3	D4	D5	M	Net	Gross	[m³]
UPE 80-120 F (PN 6)	360	-	180	170	205	125	100	160	180	152	97	294	391	160	80	138	150	200	19	M16	41.7	43.3	0.043
UPE 80-120 F (PN 10)	360	-	180	170	205	125	100	160	180	152	97	294	391	160	80	138	160	200	19	M16	40.2	41.8	0.043

Î Weights of bronze versions are approx. 10% higher.

UPE 100-60 F

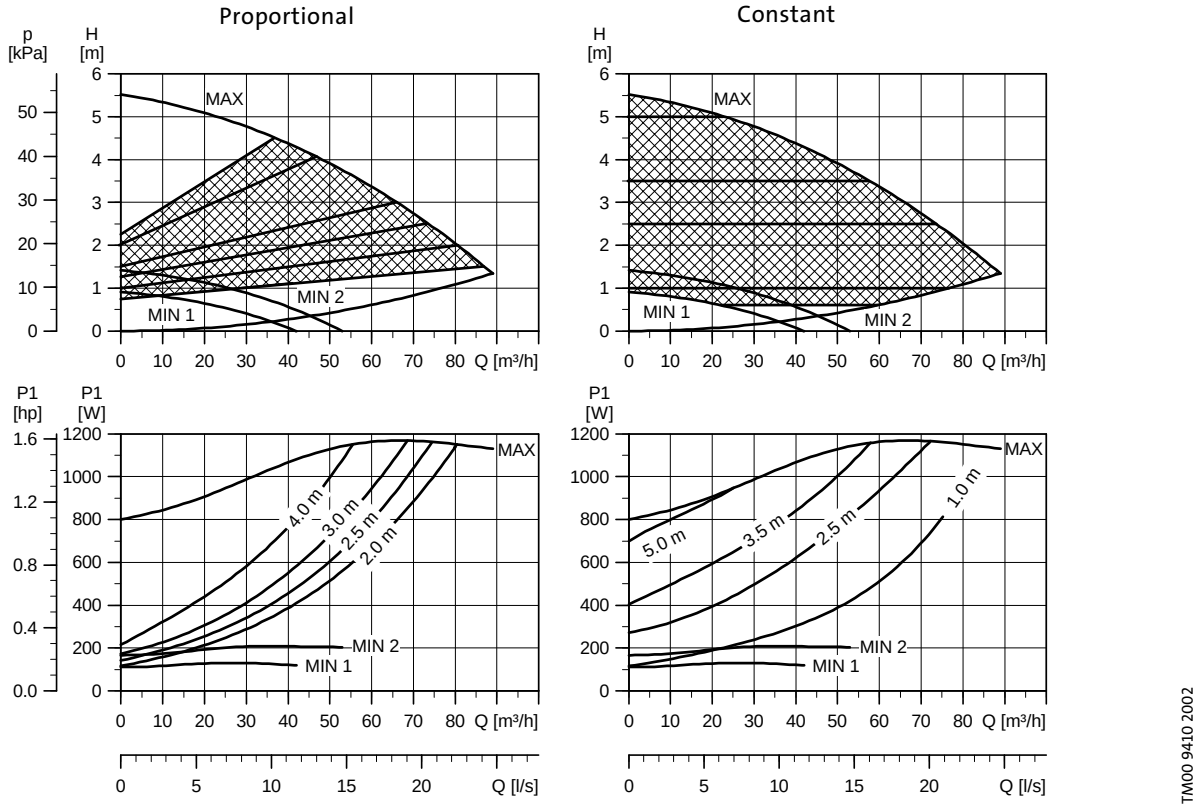

Electrical data

U_n [V]		P_1 [W]	I_n [A]
3 x 400-415 V	Min.	110	0.27
	Max.	1160	2.13

Also available with bronze housing, type B.

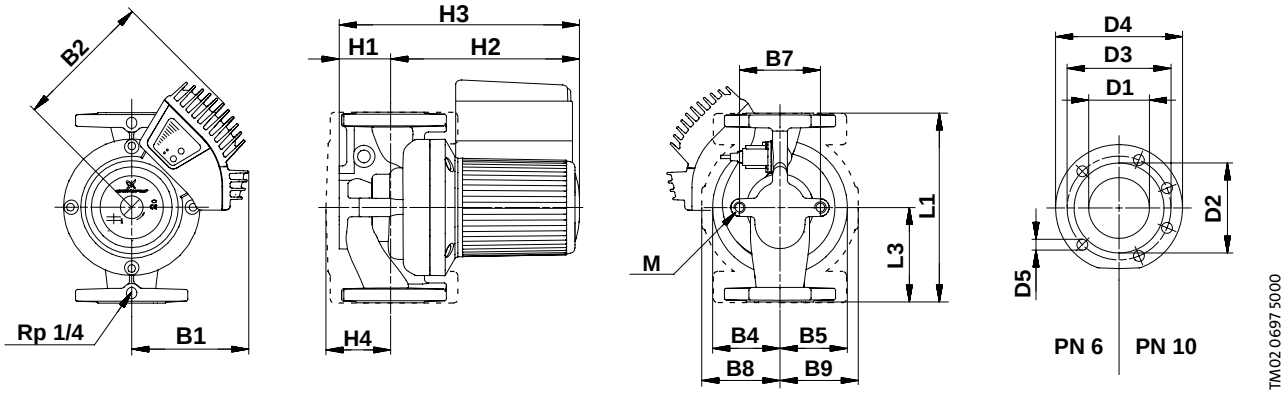

Dimensions and weights

Pump type	Dimensions [mm]																				Weights Î [kg]		Ship. vol.
	L1	L2	L3	B1	B2	B4	B5	B7	B8	B9	H1	H2	H3	H4	D1	D2	D3	D4	D5	M	Net	Gross	[m³]
UPE 100-60 F (PN 6)	450	-	225	170	205	175	125	200	217	173	122	313	435	186	100	158	170	220	19	M16	51.7	53.9	0.071
UPE 100-60 F (PN 10)	450	-	225	170	205	175	125	200	217	173	122	313	435	186	100	158	180	220	19	M16	49.2	51.4	0.071

Î Weights of bronze versions are approx. 10% higher.

MAGNA D 32-120

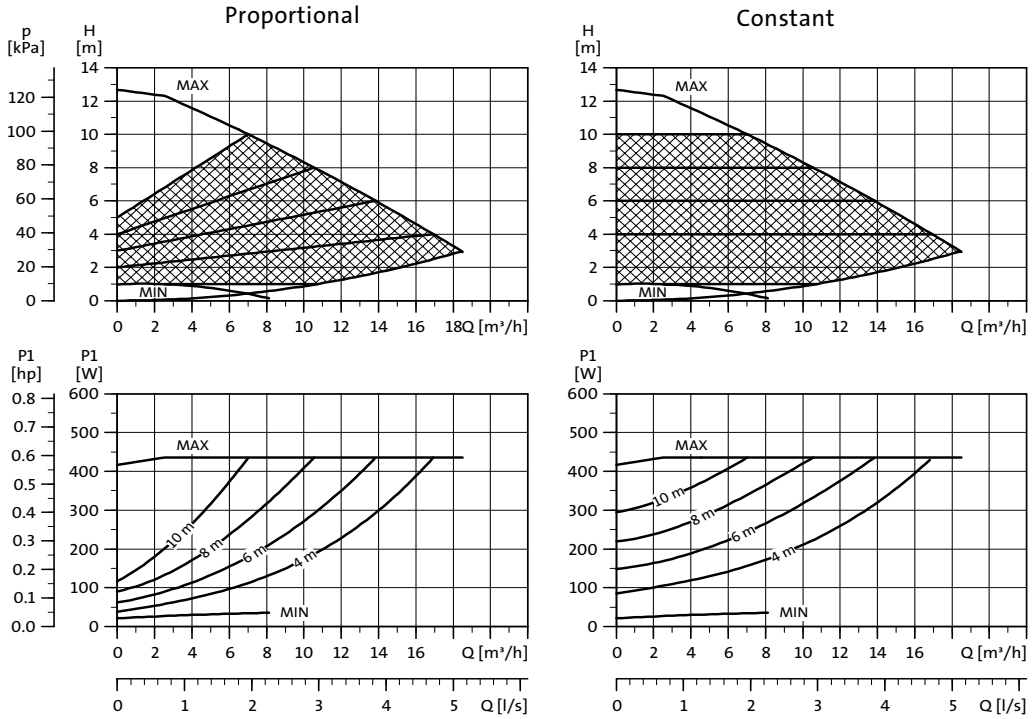

TM02 1910 2204

Electrical data

U_n [V]		P_1 [W]	I_n [A]
1 x 230-240 V	Min.	25	0.17
	Max.	430	1.8

Curves and electrical data apply to one operating pump head.

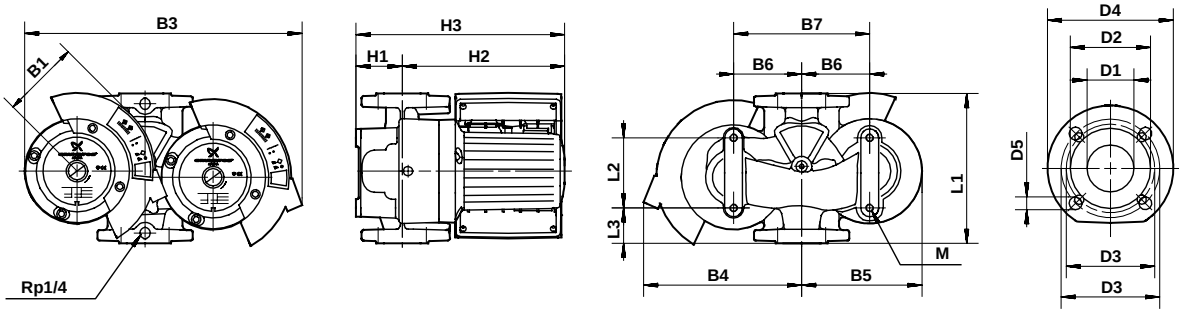

TM02 0790 2601

Dimensions and weights

Pump type PN 6 / PN 10	Dimensions [mm]																		Weights [kg]		Ship. vol.
	L1	L2	L3	B1	B3	B4	B5	B6	B7	H1	H2	H3	D1	D2	D3	D4	D5	M	Net	Gross	[m³]
MAGNA-D 32-120	220	103	52	115	465	260	190	110	200	85	240	325	32	76	90/100	140	14/19	M12	38	43	0.057

MAGNA D 40-120

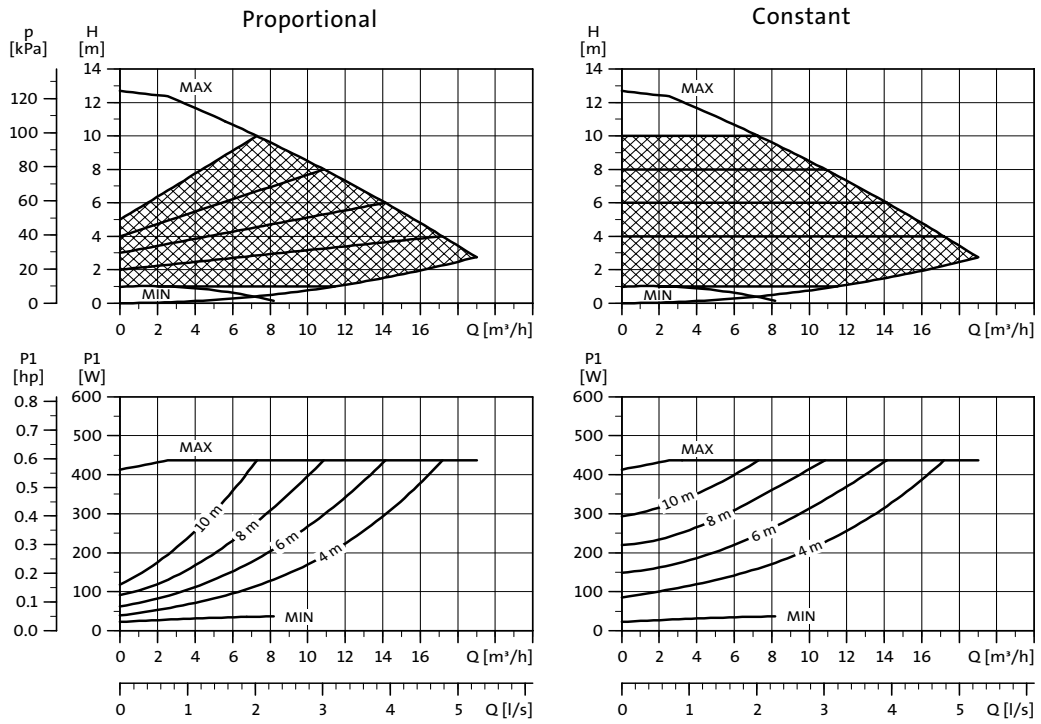

TM02 1911 2204

Electrical data

U_n [V]		P_1 [W]	I_n [A]
1 x 230-240 V	Min.	25	0.17
	Max.	450	2.0

Curves and electrical data apply to one operating pump head.

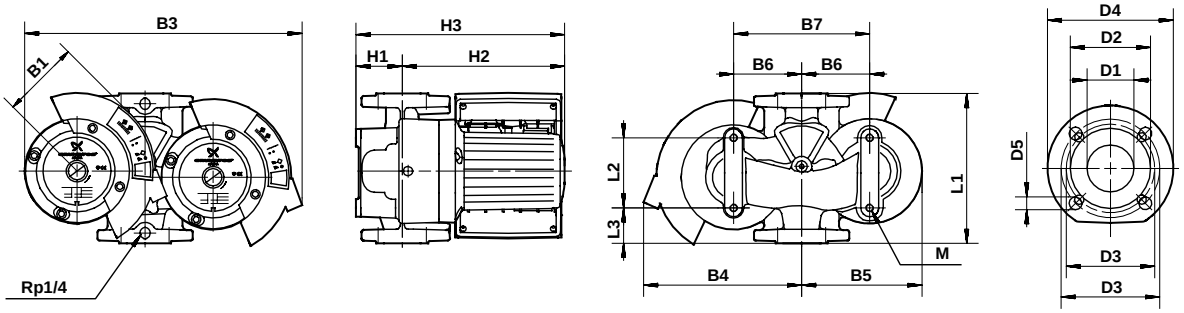

TM02 0790 2601

Dimensions and weights

Pump type PN 6 / PN 10	Dimensions [mm]																		Weights [kg]		Ship. vol.
	L1	L2	L3	B1	B3	B4	B5	B6	B7	H1	H2	H3	D1	D2	D3	D4	D5	M	Net	Gross	[m³]
MAGNA D 40-120	250	125	45	115	465	260	187	110	200	87	234	321	40	84	100/110	150	14/19	M12	40	45	0.057

MAGNA D 50-60

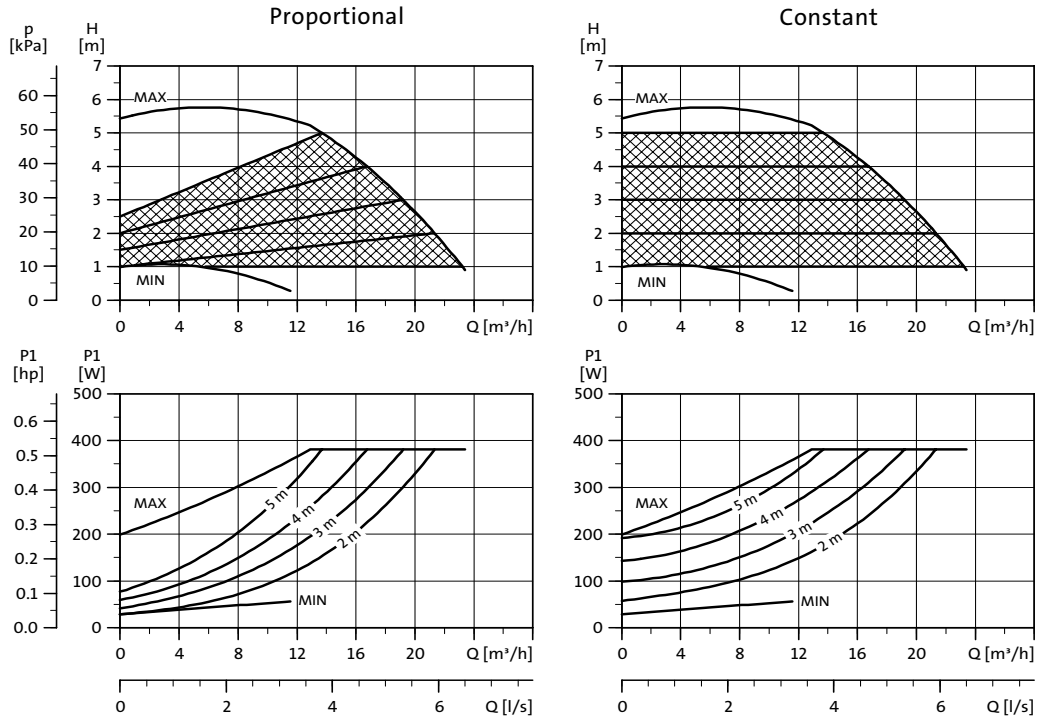

TM02 1912 2204

Electrical data

U_n [V]		P_1 [W]	I_n [A]
1 x 230-240 V	Min.	25	0.17
	Max.	400	1.7

Curves and electrical data apply to one operating pump head.

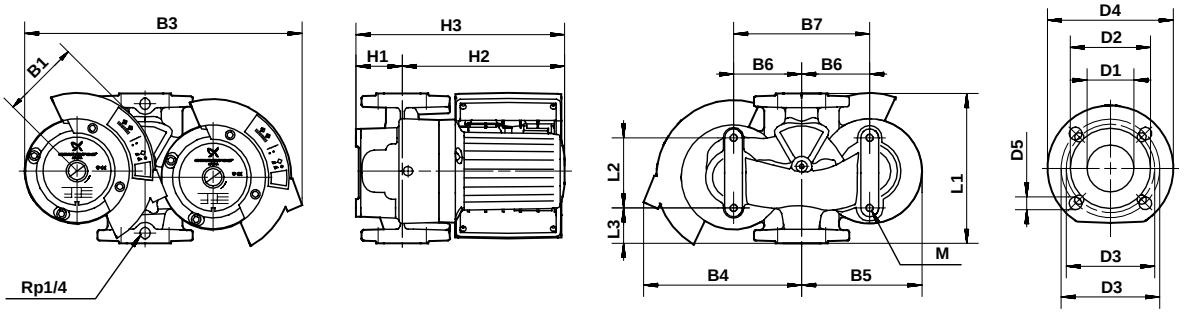

TM02 0790 2601

Dimensions and weights

Pump type PN 6 / PN 10	Dimensions [mm]																		Weights [kg]		Ship. vol.
	L1	L2	L3	B1	B3	B4	B5	B6	B7	H1	H2	H3	D1	D2	D3	D4	D5	M	Net	Gross	[m³]
MAGNA D 50-60	280	126	60	115	485	270	215	120	240	88	234	322	50	102	110/125	165	14/19	M12	36	43.5	0.13

MAGNA D 65-60

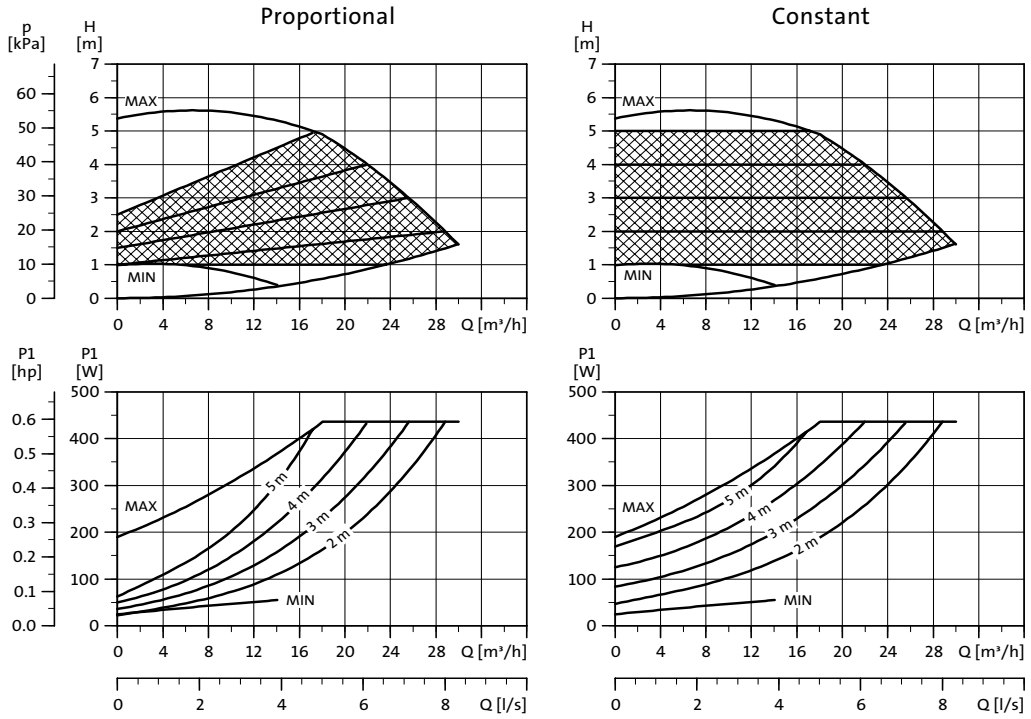

TM02 1913 2204

Electrical data

U_n [V]		P_1 [W]	I_n [A]
1 x 230-240 V	Min.	25	0.17
	Max.	450	2.0

Curves and electrical data apply to one operating pump head.

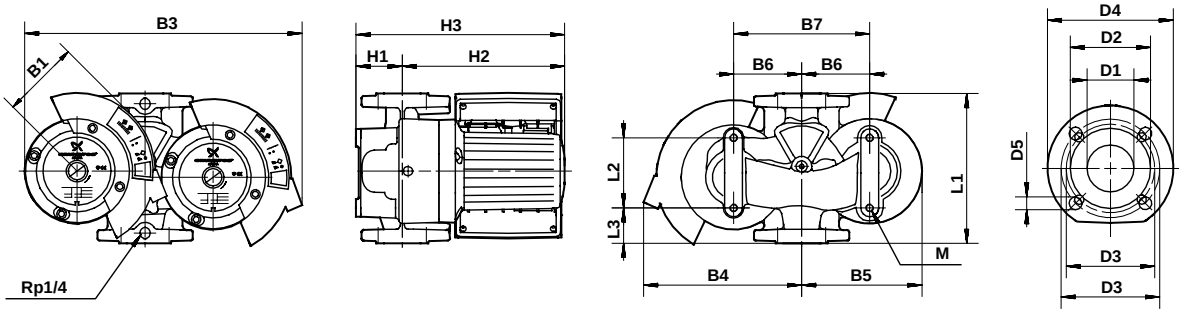

TM02 0790 2601

Dimensions and weights

Pump type PN 6 / PN 10	Dimensions [mm]																		Weights [kg]		Ship. vol.
	L1	L2	L3	B1	B3	B4	B5	B6	B7	H1	H2	H3	D1	D2	D3	D4	D5	M	Net	Gross	[m³]
MAGNA D 65-60	340	126	60	115	480	270	215	120	240	88	242	330	65	119	130/145	185	14/19	M12	42	49	0.13

MAGNA D 50-120 F

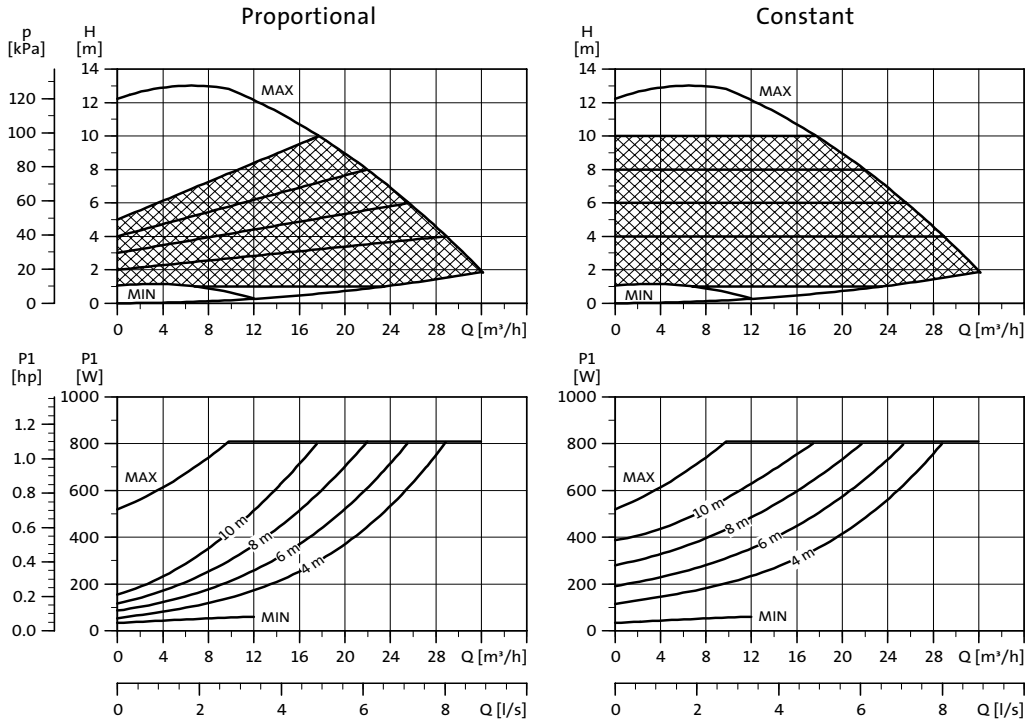

TM02 8814 2204

Electrical data

U_n [V]		P_1 [W]	I_n [A]
1 x 230-240 V	Min.	35	0.28
	Max.	800	3.5

Curves and electrical data apply to one operating pump head.

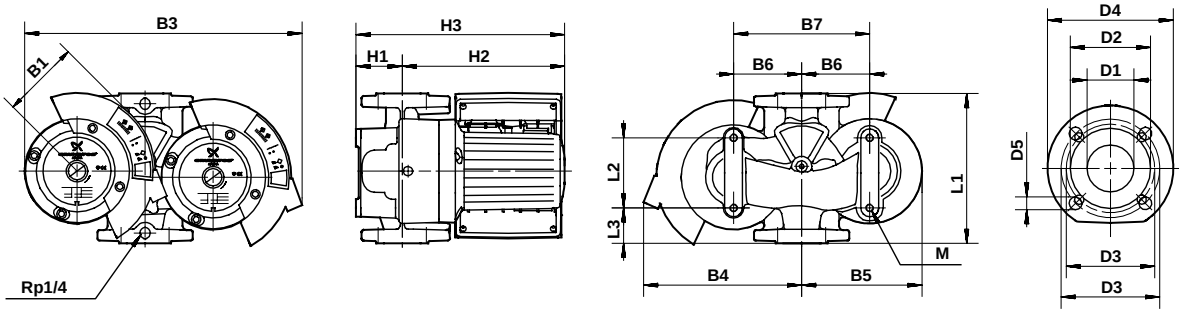

TM02 0790 2601

Dimensions and weights

Pump type PN 6 / PN 10	Dimensions [mm]																		Weights [kg]		Ship. vol.
	L1	L2	L3	B1	B3	B4	B5	B6	B7	H1	H2	H3	D1	D2	D3	D4	D5	M	Net	Gross	[m³]
MAGNA D 50-120	280	126	60	125	490	275	215	120	240	88	234	322	50	102	110/125	165	14/19	M12	43	50.5	0.13

MAGNA D 65-120 F

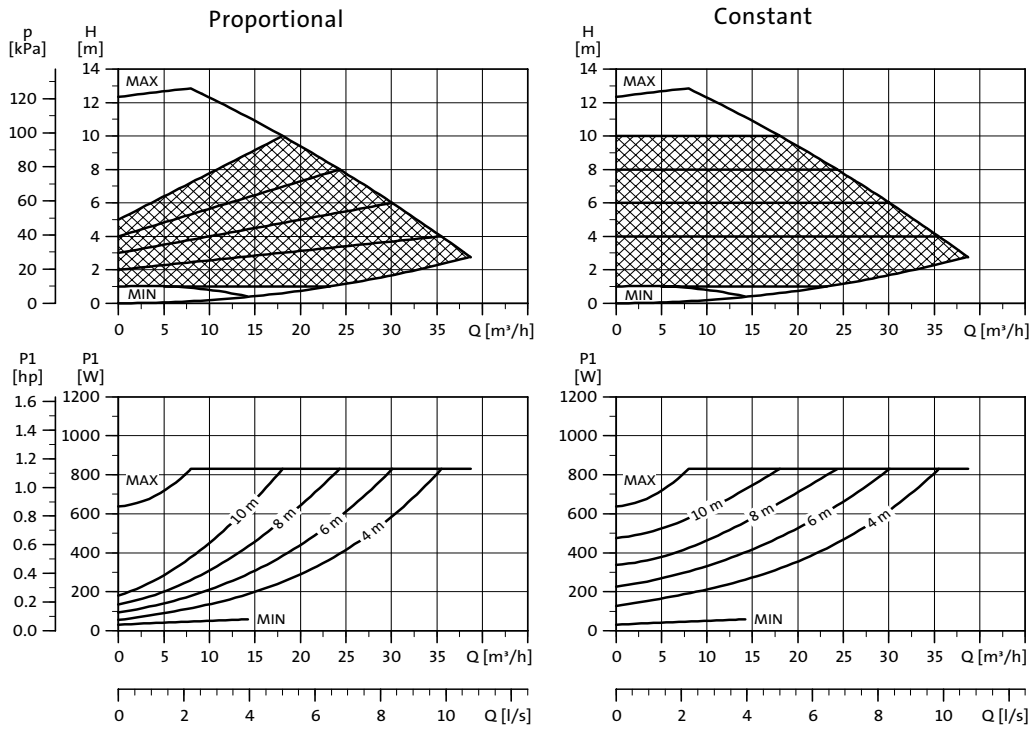

TM02 8815 2204

Electrical data

U_n [V]		P_1 [W]	I_n [A]
1 x 230-240 V	Min.	35	0.28
	Max.	900	3.9

Curves and electrical data apply to one operating pump head.

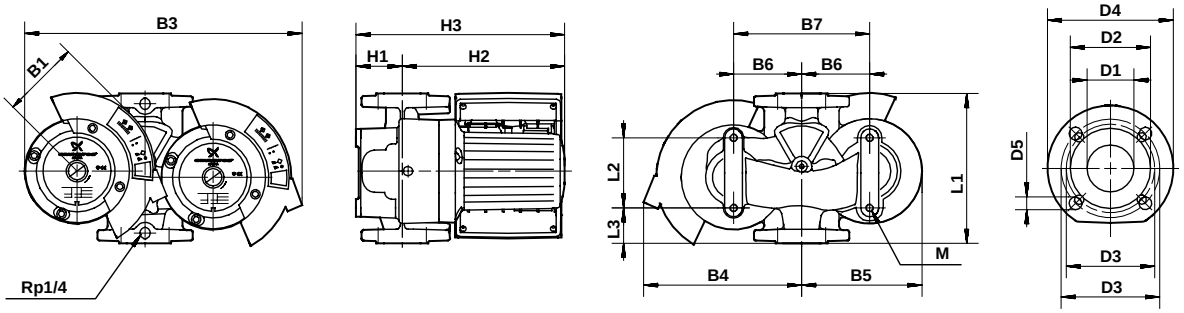

TM02 0790 2601

Dimensions and weights

Pump type PN 6 / PN 10	Dimensions [mm]																		Weights [kg]		Ship. vol.
	L1	L2	L3	B1	B3	B4	B5	B6	B7	H1	H2	H3	D1	D2	D3	D4	D5	M	Net	Gross	[m³]
MAGNA D 65-120	340	126	60	125	490	275	215	120	240	88	242	330	65	119	130/145	185	14/19	M12	49	56	0.13

UPED 80-120 F

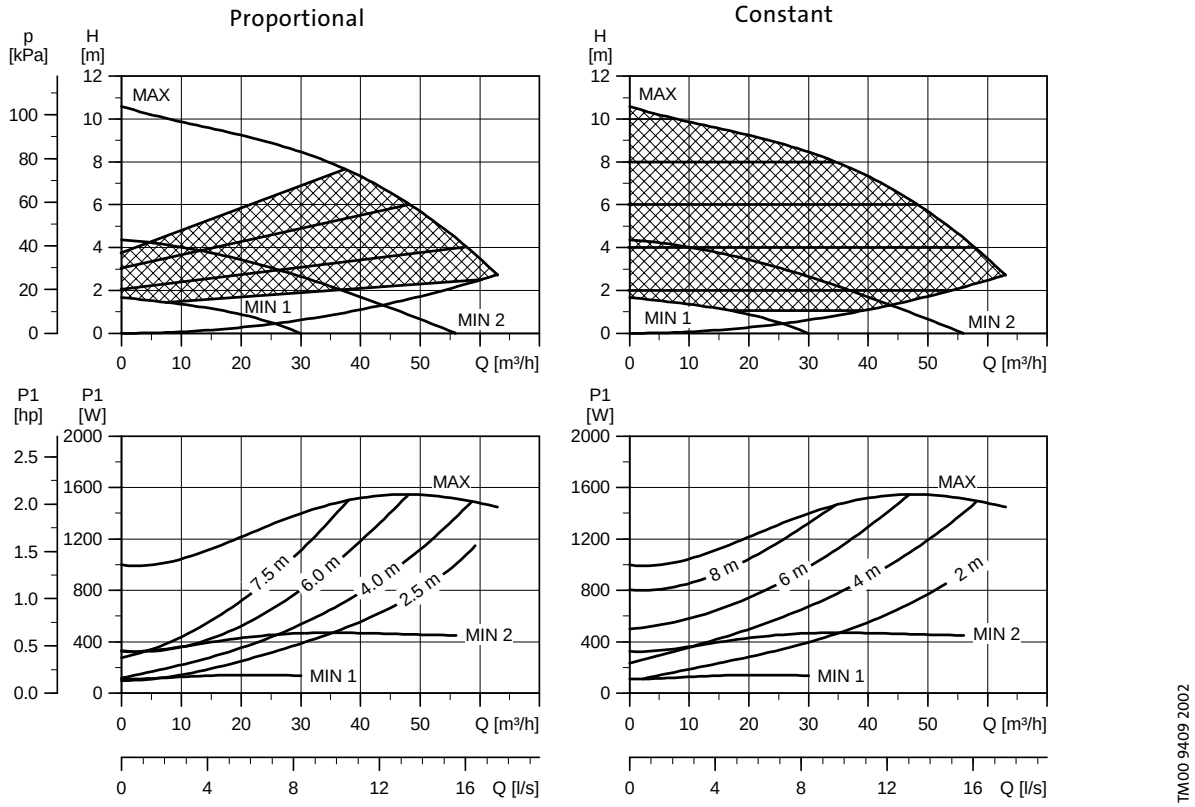

Electrical data

U_n [V]		P_1 [W]	I_n [A]
3 x 400-415 V	Min.	110	0.27
	Max.	1550	2.56

Curves and electrical data apply to one operating pump head.

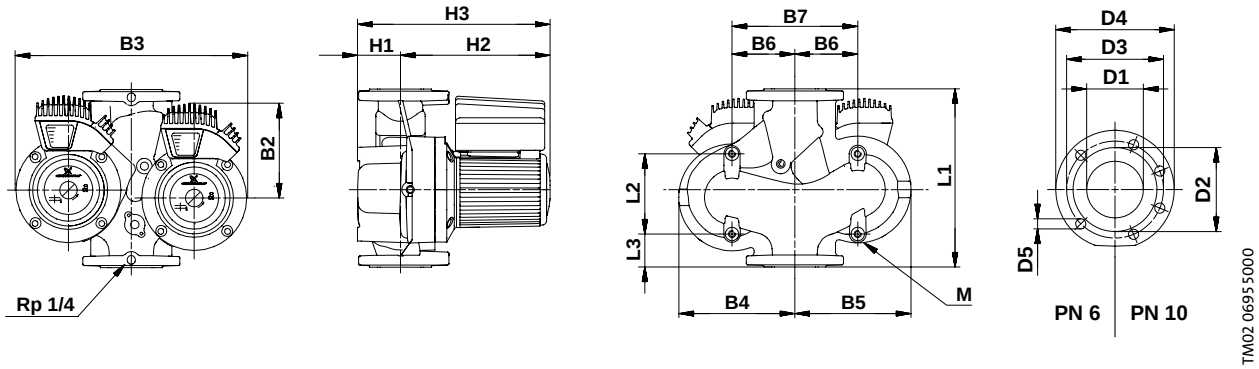

Dimensions and weights

Pump type	Dimensions [mm]																			Weights [kg]		Ship. vol.
	L1	L2	L3	B1	B2	B3	B4	B5	B6	B7	H1	H2	H3	D1	D2	D3	D4	D5	M	Net	Gross	[m³]
UPED 80-120 F (PN 6)	360	173	53	-	205	460	225	235	120	240	97	294	391	80	138	150	200	19	M16	65.4	69.4	1.112
UPED 80-120 F (PN 10)	360	173	53	-	205	460	225	235	120	240	97	294	391	80	138	160	200	19	M16	64.9	68.9	0.12

UPED 100-60 F

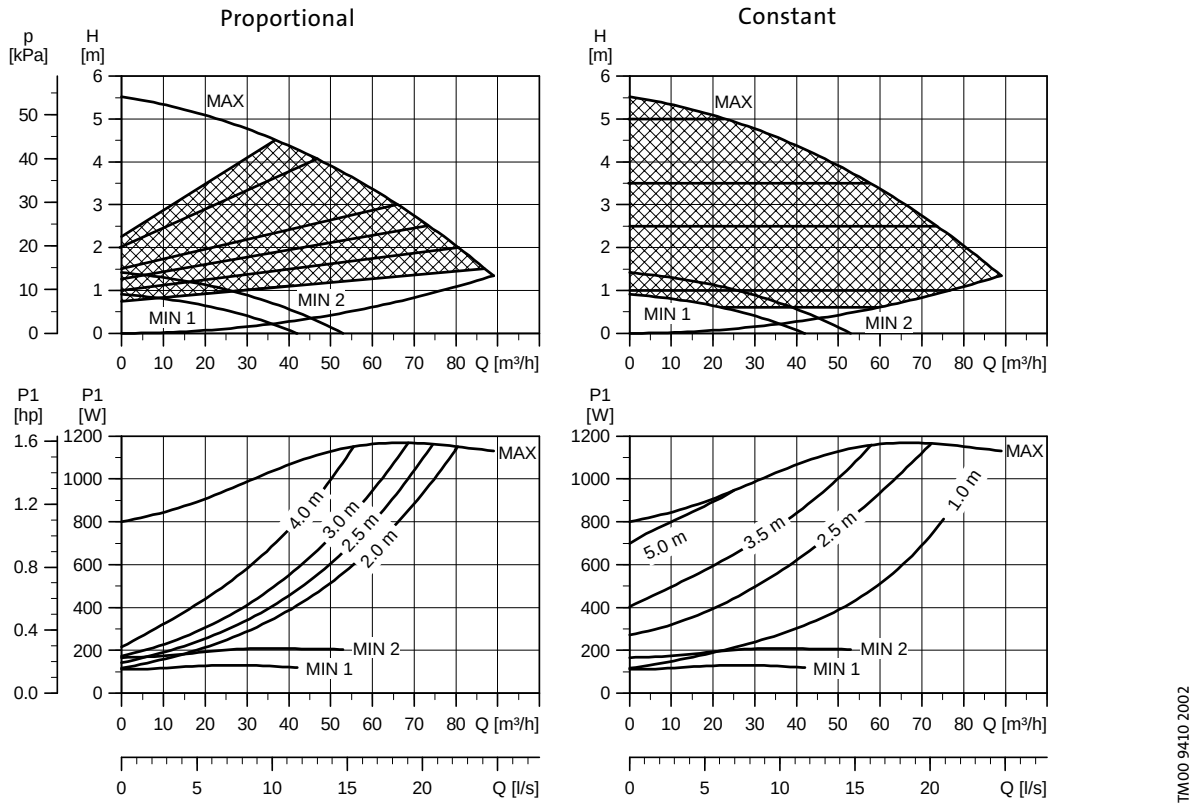

Electrical data

U_n [V]		P_1 [W]	I_n [A]
3 x 400-415 V	Min.	110	0.27
	Max.	1160	2.13

Curves and electrical data apply to one operating pump head.

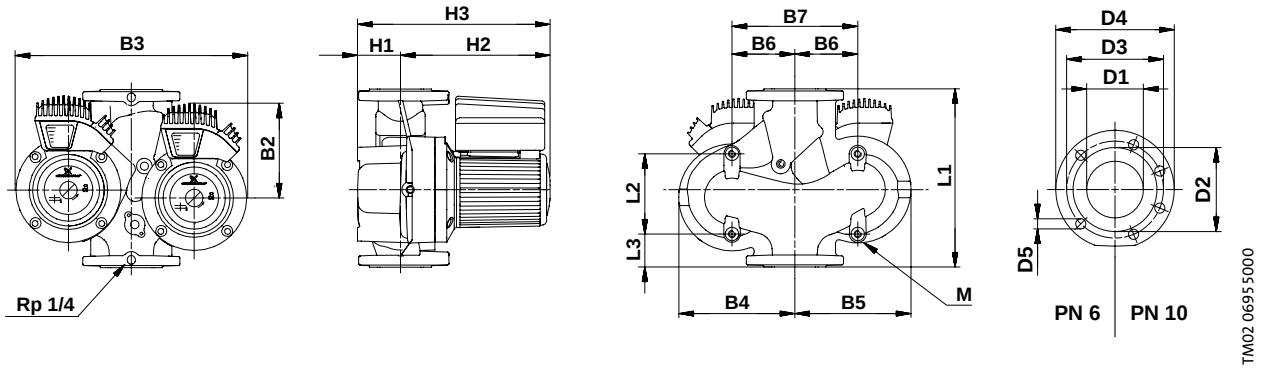

Dimensions and weights

Pump type	Dimensions [mm]																			Weights [kg]		Ship. vol.
	L1	L2	L3	B1	B2	B3	B4	B5	B6	B7	H1	H2	H3	D1	D2	D3	D4	D5	M	Net	Gross	[m³]
UPED 100-60 F (PN 6)	450	221	83	-	205	595	280	315	140	280	122	313	435	100	158	170	220	19	M16	92.4	96.4	0.112
UPED 100-60 F (PN 12)	450	221	83	-	205	595	280	315	140	280	122	313	435	100	158	180	220	19	M16	91.9	95.9	0.112

Base plates

Base plates incl. hexagon screws are available on request.

Pump type	Hexagon screws	Prod. no.
UPE 100-60 F# UPE 80-120 F	2 x M16 x 30 mm	96405914
TPE 40-60, 50-60,# TPE 32-120, 40-120, 50-120, 65-120# TPE 32-180, 40-180, 50-180, 65-180# TPE 32-240	2 x M12 x 20 mm	96405915
TPE 65-60, 80-60, 100-60# TPE 80-120# TPE 100-120	2 x M16 x 30 mm	96405914

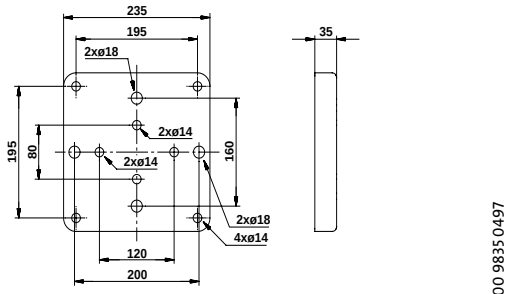

TM00 9835 0497

Pump type	Hexagon screws	Prod. no.
MAGNA 50-60 F, 65-60 F # MAGNA 32-120 F, 50-120 F # MAGNA 40-120 F, 65-120 F	2 x M12 x 20 mm	495035
MAGNA 32-120 FN, 40-120 FN # MAGNA 50-60 FN, 65-60 FN # MAGNA 50-120 FN, 65-120 FN	2 x M12 x 20 mm	485031
TPE 80-180, 100-180 # TPE 50-240, 65-240, 80-240, 100-240	2 x M16 x 30 mm	485031

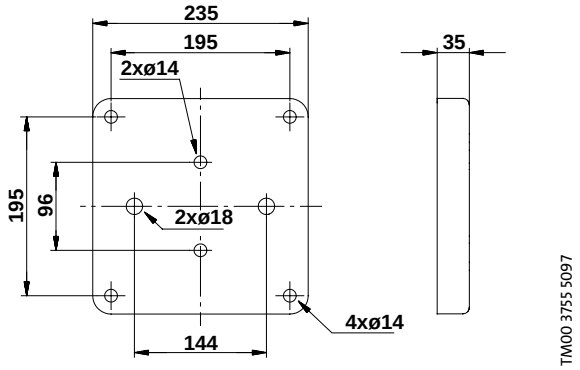

TM00 3755 5097

Counter flanges

One set consists of two flanges including gaskets and bolts.

Counter flanges according to ISO 7005-1.

Rp: Flange with internal thread (ISO seal thread).

mm: Flange for welding/soldering.

Pumps with cast iron pump housing

Pump type	Pressure stage	Size	Prod. no.
MAGNA, UPE(D), TPE(D) 32	PN 10	Rp 1¼	539703
		32 mm	539704
MAGNA, UPE(D), TPE(D) 40	PN 10 PN 16	Rp 1½	539701
		40 mm	539702
MAGNA, UPE(D), TPE(D) 50	PN 10	Rp 2	549801
		50 mm	549802
MAGNA, UPE(D), TPE(D) 65	PN 10	Rp 2½	559801
		65 mm	559802
UPE(D), TPE(D) 80	PN 6	Rp 3	569902
		80 mm	569901
	PN 10	Rp 3	569802
		80 mm	569801
UPE(D), TPE 100	PN 6	Rp 4	579901
		100 mm	579902
	PN 10	Rp 4	579801
		100 mm	579802

Pumps with bronze pump housing

Pump type	Pressure stage	Size	Prod. no.
UPE, TPE 32	PN 10	Rp 1¼	96427029
		32 mm	96427030
UPE, TPE 40	PN 10 PN 16	Rp 1½	539711
		40 mm	539712
UPE, TPE 50	PN 10	Rp 2	549811
		50 mm	549812
UPE, TPE 65	PN 10	Rp 2½	559811
		65 mm	559812
UPE, TPE 80	PN 6	Rp 3	96405735
		80 mm	569911
	PN 10	Rp 3	569812
		80 mm	569811

Blanking flanges

Pump type	Product number
MAGNA (D) 32-120 F# MAGNA (D) 40-30 F# MAGNA (D) 50-60 F# MAGNA (D) 50- 120# MAGNA (D) 65-60 F# MAGNA (D) 65-120	545048
UPED 80-120 F# UPED 100-60 F	565055
TPE(D) 40-60#	00545048
TPE(D) 50-60#	00545048
TPE(D) 65-60#	00545048
TPE(D) 80-60#	00565055
TPE(D) 32-120#	00545048
TPE(D) 40-120#	00545048
TPE(D) 50-120#	00565055
TPE(D) 65-120#	00565055
TPE(D) 32-180#	00565055
TPE(D) 40-180#	00565055
TPE(D) 32-240	00565055

Union and valve kits

Union kits

Pump type	Pressure stage	Size	Prod. no.
UPE 25	PN 10	Rp ¾	529921
		Rp 1	529922
		Rp 1¼	529724
UPE 32	PN 10	Rp 1	509921
		Rp 1¼	509922

Valve kits

Pump type	Pressure stage	Size	Prod. no.
UPE 25	PN 10	Rp ¾	519805
		Rp 1	519806
		Rp 1¼	519807
UPE 32	PN 10	Rp 1¼	505539

Insulation kits

MAGNA and UPE single-head pumps can be fitted with two insulating shells.

The insulating thickness of the insulating kit corresponds to the nominal diameter of the pump.

The insulation kit, which is tailored to the individual pump type, encloses the entire pump housing. The two shells are easily fitted around the pump.

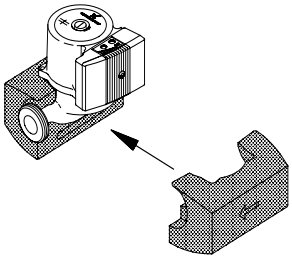

TM00 4509 3494

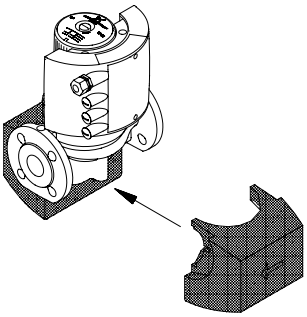

TM02 1135 0501

Pump type	Product number
UPE 15-40, 25-40, 32-40, 25-60, 32-60	505821
UPE 25-40 A, 25-60 A	505822
UPE 25-80	525242
UPE 32-80 (F)	525242
UPE 40-80 F	525243
MAGNA 32-120 F	96515226
MAGNA 40-120 F	96515227
MAGNA 50-60 F	96515228
UPE 50-80 F	545243
MAGNA 50-120 F	96515228
MAGNA 65-60 F	96515229
MAGNA 65-120 F	96515229
UPE 80-120 F	96434645
UPE 100-60 F	96434646

Expansion modules for UPE 1~

UPE single-phase pumps can be fitted with a fault signal module or a bus module.

Expansion module is fitted to the terminal box by removing the existing terminal box cover and fitting the new cover incorporating the module to the terminal box.

The new cover increases the height of the terminal box by approx. 20 mm.

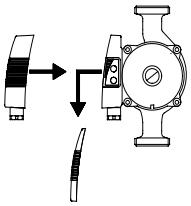

TM00 4463 3494

Pump type	Fault signal module		Bus module	
	Type	Prod. no.	Type	Prod. no.
UPE xx-40 (A)# UPE xx-60 (A)	MC 40/60	605663	MB 40/60	605518
UPE xx-80 (F)	MC 80	605666	MB 80	605497

Fault signal module MC 40/60 and MC 80

Via an internal relay, the fault signal module gives access to a potential-free fault signal.

In addition to this fault signal output, the module has four inputs for external signals for:

- start/stop of pump
- max. curve duty
- min. curve duty (night-time duty)
- analog 0-10 V input.

Input and output signals	
External start/ stop input	External potential-free switch.# Screened cable.# Maximum contact load: 5 V/2.7 mA.
Setpoint signals	• **Min. and max. curve input**# External potential-free switch.# Screened cable.# Maximum contact load: 5 V/2.7 mA. • **Input for analog 0-10 V signal**# External signal: 0-10 VDC.# Maximum contact load: 0.1 mA.
Signal output	Internal potential-free changeover contact.# Screened cable.# Maximum contact load: 250 VAC, 2 A. # Minimum contact load: 5 VDC, 1 mA.

Connection of MC 40/60

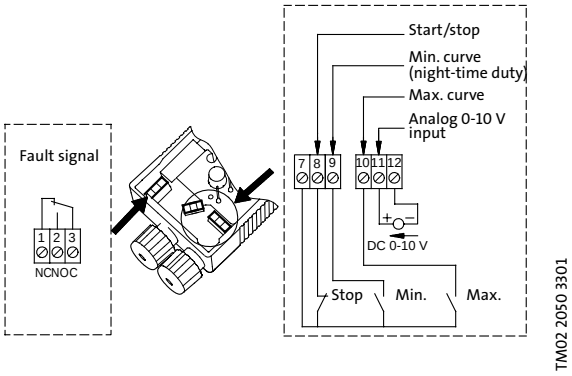

Connection of MB 40/60

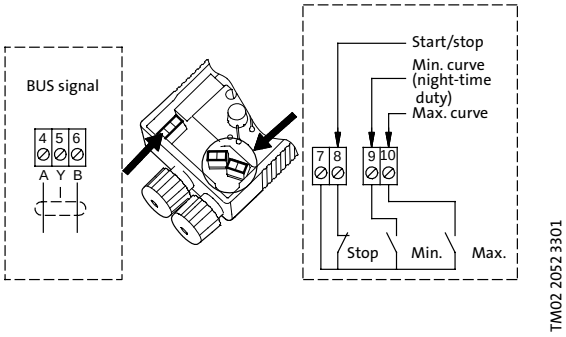

Connection of MC 80

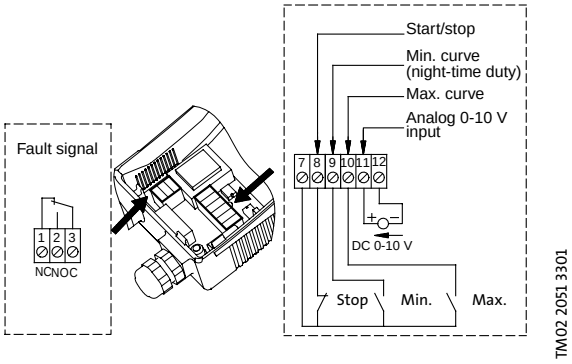

Connection of MB 80

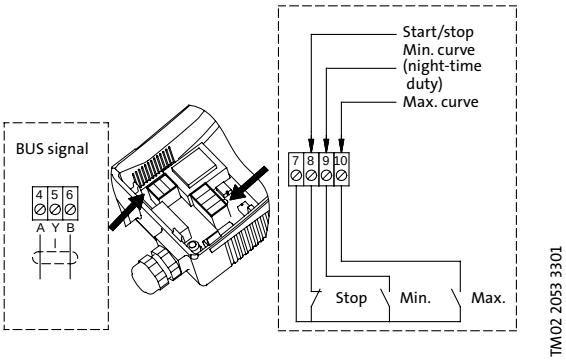

Bus module MB 40/60 and MB 80

The bus module enables serial communication with the pump via an RS-485 input. In addition to the bus input, the bus module has three inputs for external signals for:

- start/stop of pump
- max. curve duty
- min. curve duty (night-time duty).

Input signals	
External start/ stop input	External potential-free switch.# Screened cable.# Maximum contact load: 5 V/2.7 mA.
Setpoint signals	Min. and max. curve input# External potential-free switch.# Screened cable.# Maximum contact load: 5 V/2.7 mA.
Bus input	Grundfos GENIbus protocol, RS-485.# Screened cable.# Lead cross section: 0.25 - 1 mm^2.# Cable length: Max. 1200 m.

Expansion modules for MAGNA

MAGNA can be fitted with an expansion module enabling communication via external signals (signal transmitters).

Two types of expansion module are available:

- GENI module
- LON module.

The expansion module is fitted by opening the terminal box cover and placing the module inside the terminal box.

Description	Product number
GENI module	605803
LON module	605809

GENI module

The GENI module has an input for an external 0-10 VDC analog signal transmitter (terminal 10 V and ⏚). Via this input, the pump can be controlled by an external controller if the pump has been set to one of the following control modes:

- Constant curve
- Proportional or constant pressure control.

The GENI module also incorporates inputs for external signals for the forced-control functions:

- max. curve duty
- min. curve duty.

Input signals	
Setpoint signals	• **Min. and max. curve input**# External potential-free switch.# Contact load:# Max. 5 V, 1 mA.# Screened cable.# Loop resistance: Maximum 130 T. • **Input for analog 0-10 V signal**# External signal: 0-10 VDC.# Max. load: 0.1 mA.# Screened cable.
Bus input	Grundfos GENIbus protocol, RS-485.# Screened cable.# Lead cross section: 0.25 - 1 mm^2.# Cable length: Max. 1200 m.

Connection of GENI module

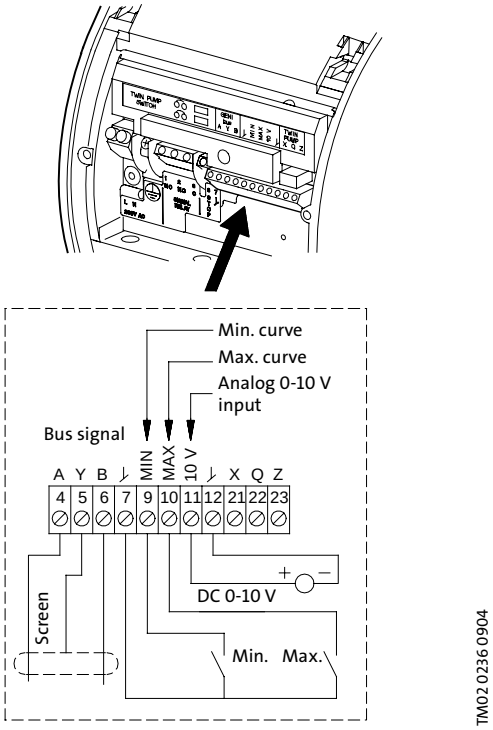

LON module

The LON module offers the possibility of connecting the pump to a LonWorks™ network. The module is used for data transmission between a network and MAGNA UPE.

Input signals	
Bus input	LonTalk™ protocol, FTT 10.# Non-screened, twisted pair cable.# Lead cross section: 0.25 - 1 mm^2.

Connection of LON module

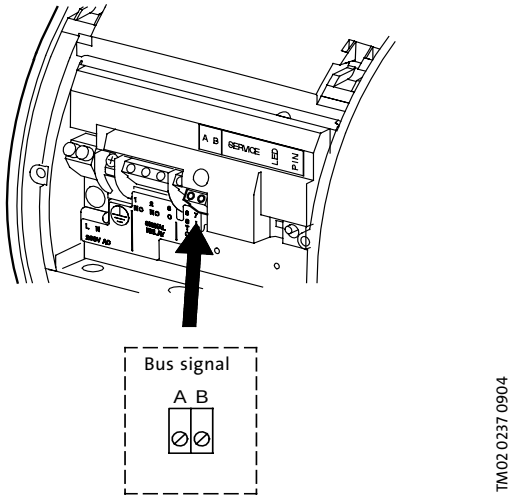

Fittings kit for TPED

Fittings kit is used for connecting two sensors, one on the discharge side and one on the suction side.#
The sensors measure the differential pressure.

Description	Content	Product number
Fittings kit	2 tees# 2 hexagon nipples	96491010

R100

R100 is used for wireless communication with the Series 2000. The communication takes place by means of infrared light.

Description	Product number
R100	625333

PMU 2000

PMU 2000 is used for communication via bus, enabling:

- parallel connection of up to eight pumps
- cascade control
- central reading out of various status information.

Product	Description	Product number
PMU 2000, IP 42	Max. 8 pumps	62572847
PMU 2000, IP00	Max. 8 pumps	62572837

PCU 2000

PCU 2000 is used for communication via bus, enabling:

- fault indication for each pump
- external setpoint influence
- start/stop of system.

Product	Description	Product number
PCU 2000, IP 42	Max. 2 pumps	62552241
PCU 2000, IP 00	Max. 2 pumps	62552231
PCU 2000, IP 42	Max. 4 pumps	62552441
PCU 2000, IP 00	Max. 4 pumps	62552431
Expansion modules	For 2 pumps	62500211

G10-LON interface

The G10-LON interface is used in connection with data transmission between a LonWorks® Network and electronically controlled Grundfos pumps applying the Grundfos bus protocol GENIbus.

Product	Product number
G10-LON interface	00605726

Prefilter

A prefilter must be installed if classification of the UPE pump to overvoltage property class 1 or 2 in accordance with VDE 0160/12.90 is required.

Three-phase UPE pumps require three prefilters.

Product	Product number
Prefilter	62582200

Order data

UPE Series 2000, cast iron

Pump type	Product number					
	Pipe connection			Flange connection		
	1"	1½"	2"	PN 6/PN 10	PN 6	PN 10
Single-head pumps						
UPE 15-40	59504519					
UPE 25-40		59544092				
UPE 25-40 A		59544094				
UPE 32-40			59584406			
UPE 25-60 130		59526544				
UPE 25-60 180		59546574				
UPE 25-60 A		59566507				
UPE 32-60			59586505			
UPE 25-80		52001127				
UPE 32-80			52052028			
UPE 32-80 F				52052041		
UPE 40-80 F				52022107		
UPE 50-80 F				52052046		
MAGNA 32-120 F				96513625		
MAGNA 40-120 F				96513626		
MAGNA 50-60 F				96513627		
MAGNA 65-60 F				96513628		
MAGNA 50-120 F				96504872		
MAGNA 65-120 F				96504873		
UPE 80-120 F					96402442	96402443
UPE 100-60 F					96402616	96402618
Twin-head pumps						
MAGNA (D) 32-120 F				96513629		
MAGNA (D) 40-120 F				96513640		
MAGNA (D) 50-60 F				96513641		
MAGNA (D) 65-60 F				96513642		
MAGNA (D) 50-120 F				96504874		
MAGNA (D) 65-120 F				96504875		
UPED 80-120 F					96403133	96403134
UPED 100-60 F					96405833	96405834

UPE Series 2000, bronze

Pump type	Product number				
	Pipe connection		Flange connection		
	1½"	2"	PN 6/PN 10	PN 6	PN 10
UPE 25-40 B	59544093				
UPE 25-60 B	59736517				
UPE 32-80 B		52052038			
UPE 32-80 F B			52052040		
UPE 40-80 F B			52052039		
UPE 80-120 F B				96405829	96402446
UPE 100-60 F B				96405830	96405832

MAGNA Series 2000, stainless steel

Pump type	Product number
	Flange connection
	PN 6/PN 10
MAGNA 32-120 FN	96513643
MAGNA 40-120 FN	96513644
MAGNA 50-60 FN	96513645
MAGNA 65-60 FN	96513646
MAGNA 50-120 FN	96504876
MAGNA 65-120 FN	9650487