Fiche produit Motralec Bell And Gossett PL - fiche technique | Motralec
■ DEMANDE DE PRIX RAPIDE : https://www.motralec.com/demandeContact

Quiet, Reliable Inline Circulators for Heating/Cooling & Plumbing Systems

- Maintenance-free
- Easily handles dirty water conditions
- Rugged, compact design
- 25% more efficient than competition
- Close-coupled dry motor

LOW LEAD CONTENT†

Series PL™

A SUPERIOR ALTERNATIVE TO WET ROTOR PUMPS

A-142F

motralec
4 rue Lavoisier . ZA Lavoisier . 95223 HERBLAY CEDEX
Tel. : 01.39.97.65.10 / Fax. : 01.39.97.68.48
Demande de prix / e-mail : service-commercial@motralec.com
www.motralec.com

Bell & Gossett
a xylem brand

Description

The Series PL™ close coupled booster pumps are specifically designed for quiet operation in hydronic, radiant and geothermal heating and cooling systems. These inline permanently lubricated pumps are available in cast iron or lead-free† bronze body construction.

Operating Data

Maximum working pressure . . . . . .150 psi (10 bar)
Maximum operating temperature . . . . . 225°F (107°C)

Materials of Construction

Pump Body . . . . . Cast Iron or Lead-Free† Bronze
Face Plate . . . . . Stainless Steel
Impeller . . . . . 30% Glass Filled Noryl®
PL-55 & PL-130. . . Glass Filled PPS
Shaft . . . . . Solid High-Strength Alloy Steel
Seal System . . . . . Carbon/Silicon Carbide
Bearings . . . . . XL11™ Permanently Lubricated Sealed Precision Bearings
Motor Type . . . . . ODP

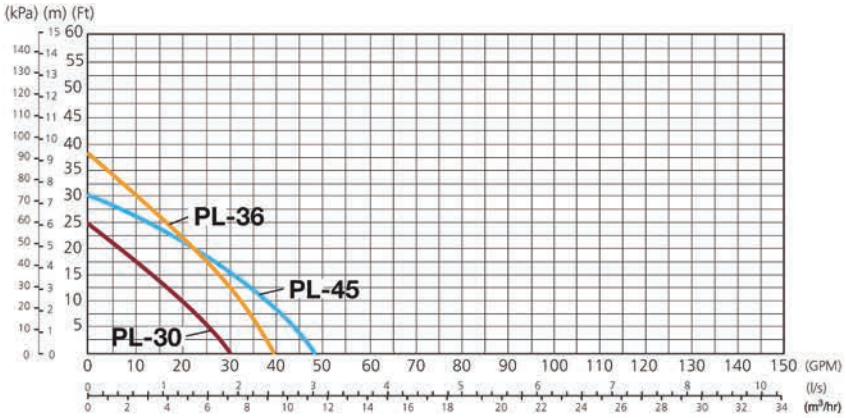

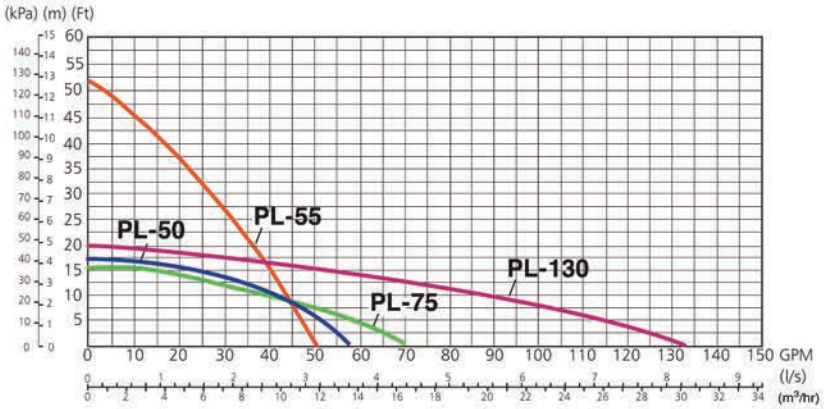

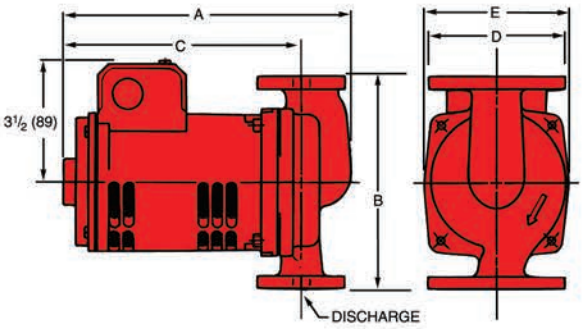

Dimension & Weights

Cast Iron Model No.	Cast Iron Part No.	Lead-Free† Bronze Model No.	Lead-Free† Bronze Part No.	Flange Size Inches - NPT	Motor Characteristics* HP	ø	Voltage	RPM	Dimensions in inches (mm) @ 60 Hz (Open Drip-Proof) A	B	C	D	E	Approx. Shipg. Wt. lbs. (Kg)
PL-30	1BL012	PL-30B	1BL013LF	3/4 1 & 1 1/4 1 1/2	1/12	1	115	2650	8 5/8 (219)	6 3/8 (162)	7 1/8 (181)	4 3/16 (106)	4 3/8 (111)	11.6 (5.3)
PL-36	1BL001	PL-36B	1BL003LF	3/4 1 & 1 1/4 1 1/2	1/6			3300	8 5/8 (219)	6 3/8 (162)	7 1/8 (181)	4 3/16 (106)	4 3/8 (111)	13.1 (6.0)
PL-45	1BL002	PL-45B	1BL004LF	1 1 1/4 & 1 1/2	1/6			3300	9 1/8 (232)	8 1/2 (216)	7 1/4 (184)	4 5/8 (117)	4 3/8 (111)	14.5 (6.6)
PL-50	1BL016	PL-50B	1BL017LF	1 1 1/4 & 1 1/2	1/6			3300	9 1/8 (232)	8 1/2 (216)	7 1/4 (184)	4 5/8 (117)	4 3/8 (111)	14.5 (6.6)
PL-55	1BL032	PL-55B	1BL068LF 1BL069LF	3/4 1 & 1 1/4 1 1/2	2/5			3250	9 9/16 (243)	6 3/8 (162)	7 15/16 (202)	4 3/16 (106)	4 3/4 (121)	13.1 (6.0)
PL-75	1BL034	PL-75B	1BL035LF	2	1/6			3400	9 15/16 (252)	8 1/2 (216)	7 3/8 (187)	5 3/16 (132)	4 5/8 (117)	18.5 (8.4)
PL-130	1BL063	PL-130B	1BL065LF	2	2/5			3200	10 3/4 (273)	8 1/2 (216)	8 1/4 (210)	5 3/16 (132)	5 1/8 (130)	22 (10)

* 230/60/1 and 277/60/1 motors available upon request. Models PL-75 and PL-130 have a four bolt hole flange connection, all others have two bolt hole flange connectors. Dimensions are approximate and subject to changes. Contact factory for certified dimensions.

† Contains less the 0.25% leads content by weight on wetted surfaces.

xylem
Let's Solve Water

motralec
4 rue Lavoisier . ZA Lavoisier . 95223 HERBLAY CEDEX
Tel. : 01.39.97.65.10 / Fax. : 01.39.97.68.48
Demande de prix / e-mail : service-commercial@motralec.com
www.motralec.com

Fiche produit Motralec Bell And Gossett PL - fiche technique | Motralec

■ **DEMANDE DE PRIX RAPIDE : https://www.motralec.com/demandeContact**