Sezione - Cross section - Schnittzeichnung - Section - Sección - Sektion

MPC

MPC 11
MPC 21
MPC 31
MPC 41
MPC 51
MPC 61
MPC 71

Service kit

Pos	Qtà
14.14	
14.15	
14.20	
15.00	
15.04	
15.12	
15.16	
27.08	
28.00	
28.12*	
36.00	
73.00	
81.00	

* Solo nei tipi
Only for types
MPC 11

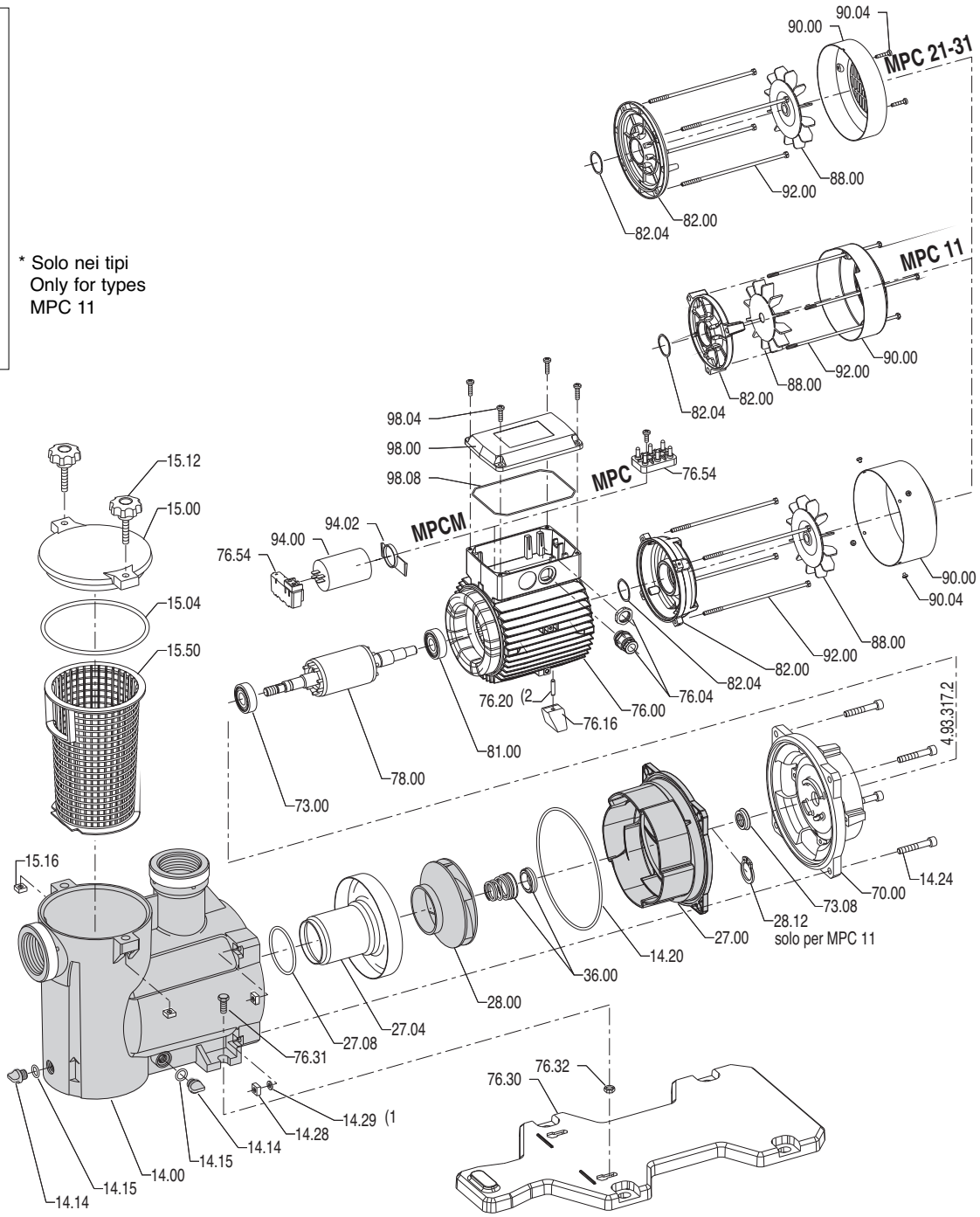

(1 14.29 solo per MPC(M) 11-21-31-41
(2 76.20 solo per MPC(M) 41-51-61-71

www.motralec.com / service-commercial@motralec.com / 01.39.97.65.10