Sezione - Cross section - Schnittzeichnung - Section - Sección - Sektion

META SMALL

META SMALL

Service kit

Pos	Qtà
14.06	1
14.16	1
14.20	1
14.64	1
14.66	1
16.17	2
17.00	1
17.04	1
17.10	1
17.20	1
22.12	1
22.16	1
28.04	2
36.00	1
36.51	1
73.00	1
81.00	1
98.58	1

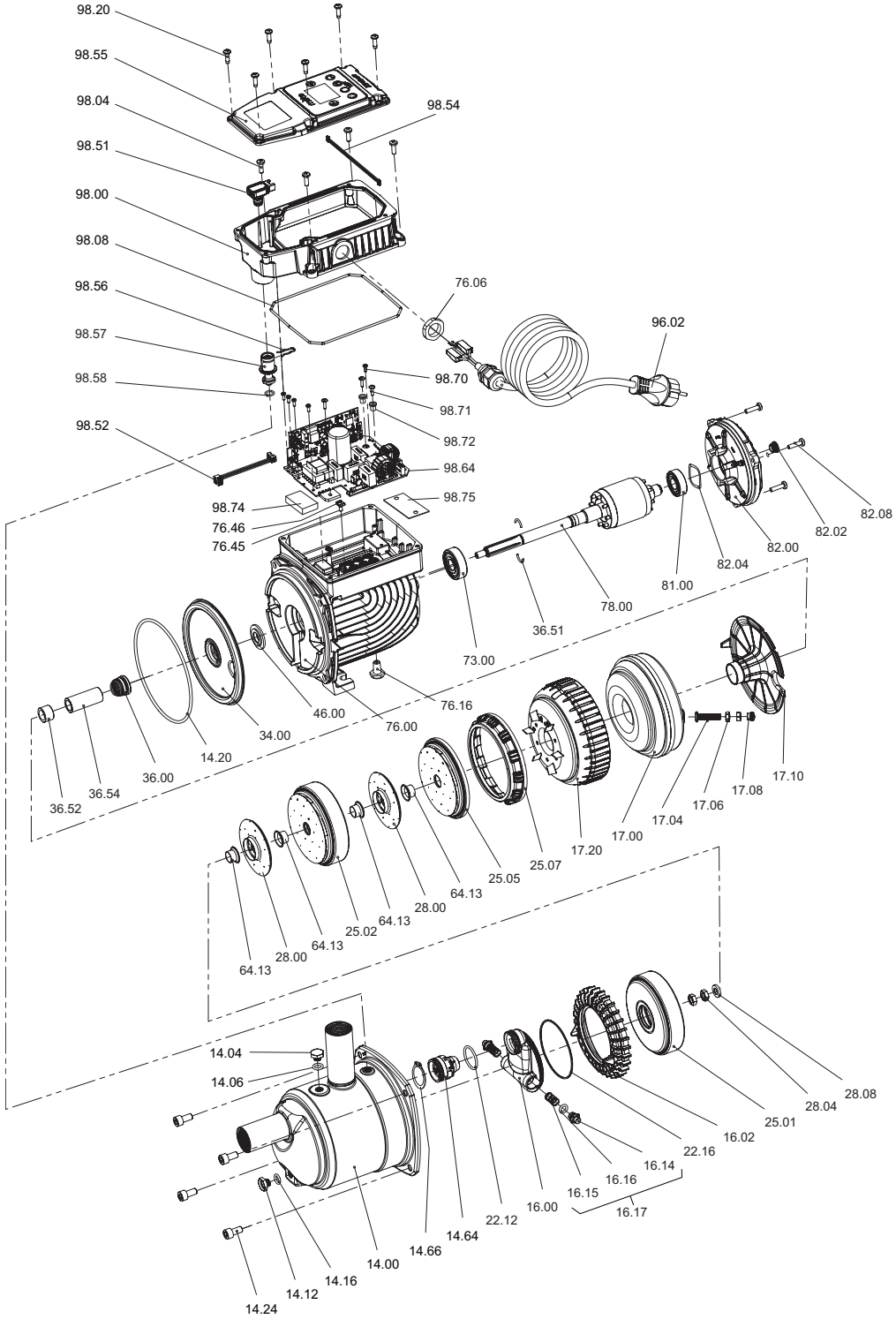

www.motralec.com / service-commercial@motralec.com / 01.39.97.65.10