HOMA
PUMP TECHNOLOGY

Compact waste water disposal unit with cutter pump

Saniflux

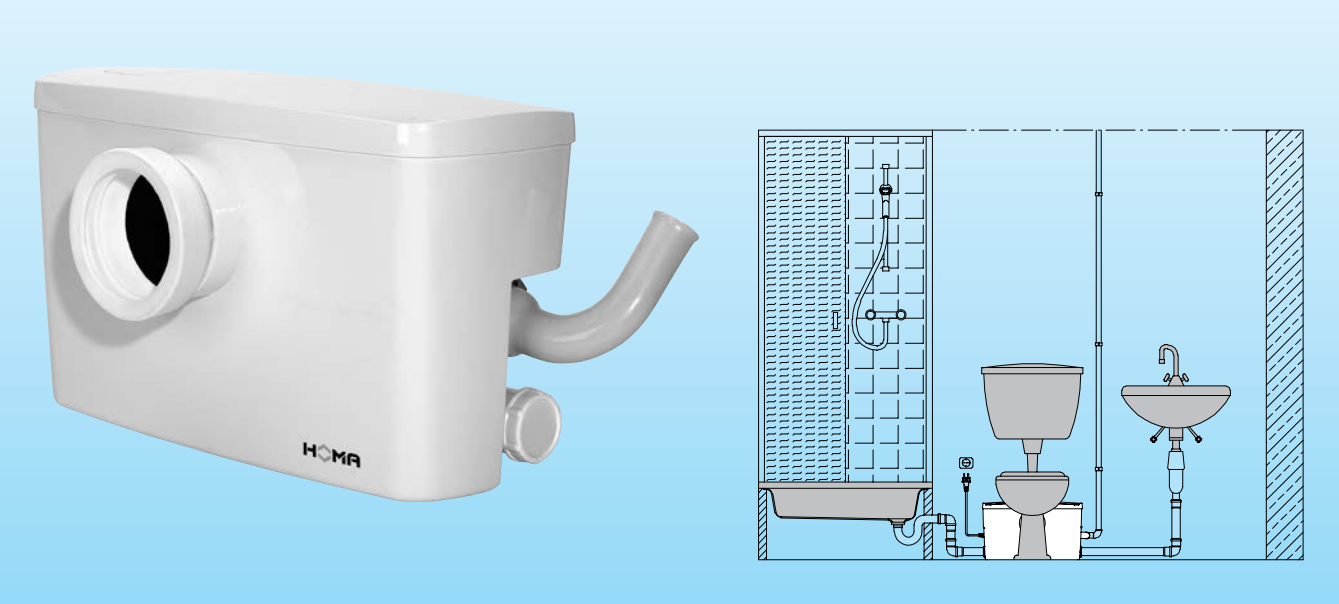

Application

Compact lifting station for sanitary installations comprising a single WC, hand basin or shower in basement apartments or cellars below sewer backwaste level. The Saniflux is also ideal for subsequent installation of sanitary facilities. The built-in submersible pump with its stainless steel cutter system reduces soft solids to small pieces. The discharge pipe with 1" minimum diameter can be easily installed with minimum construction work.

DIN EN 12050-3: Conformity and design approved and controlled by LGA, Certificate No. 0220119.

Pumped liquid: Domestic drainage water, domestic waste water with faeces.

Maximum liquid Temperature: 35°C, short term up to 60°C.

Operation: Intermittent.

Design

Compact waste water disposal unit comprising:

Collection Tank: Odour-tight plastic collection tank. Maximum utility volume 15.5 litres. WC-inlet: DN 100 horizontal, inlet height 180 mm. Two lateral inlets DN 40 with integrated non-return valves. Discharge 25 mm diameter with integrated non-return valve. Air vent with activated carbon filter.

Pump: Single-stage centrifugal pump with horizontal discharge. Open multi-channel impeller with cutting sytem.

Motor: Single-phase electric motor with thermal sensors embedded in the winding. Insulation Class B. Degree of protection IP 68. Stainless steel rotor shaft, pre-lubricated bearings, double mechanical seal.

Pump Operation Control: pneumatic level control.

Materials:	
Collection tank	Composite
Pump housing	Glass fibre reinforced composite
Impeller	Composite
Motor housing, cutting system, rotor shaft	Stainless steel 1.4301

Technical Data

Motor input P_1	650 W
Motor output P_2	350 W
Voltage	230V-240V / 1 Ph 50 Hz
Speed	2900 rpm
Nominal current	2.1 A
Cable	H 03VVF3x0.75
Insulation Class, (complete appliance)	IP 44
Weight	8 kg
Discharge	DN 25

Equipment supplied

Tank with pump, cable with plug.

www.motralec.com / service-commercial@motralec.com / 01.39.97.65.10

Performance

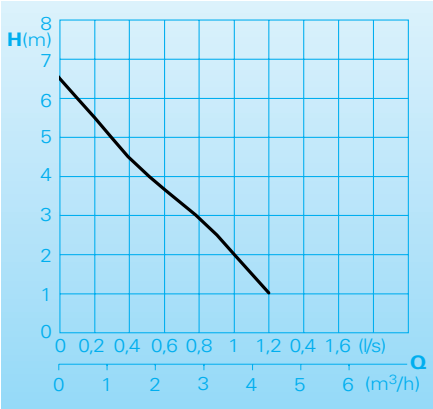

Installations

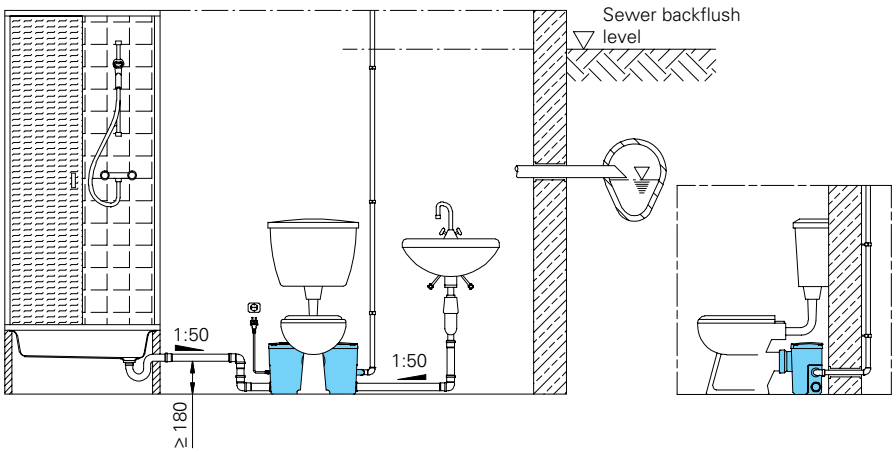

Accessories

Part Description	Dimension	Part No.
Bronze gate valve	BSP 1" F	2216010
	BSP 1¼" F	2216012
	BSP 1½" F	2216015
90° galvanized elbow	BSP 1" F/M	2111305
	BSP 1¼" F/M	2111405
	BSP 1½" F/M	2111505
Galvanized union piece	BSP 1" M/F	2114303
	BSP 1¼" M/F	2114304
	BSP 1½" M/F	2114305
AL3 alarm control panel with water level sensor for the collecting tank		1586143

Dimensions

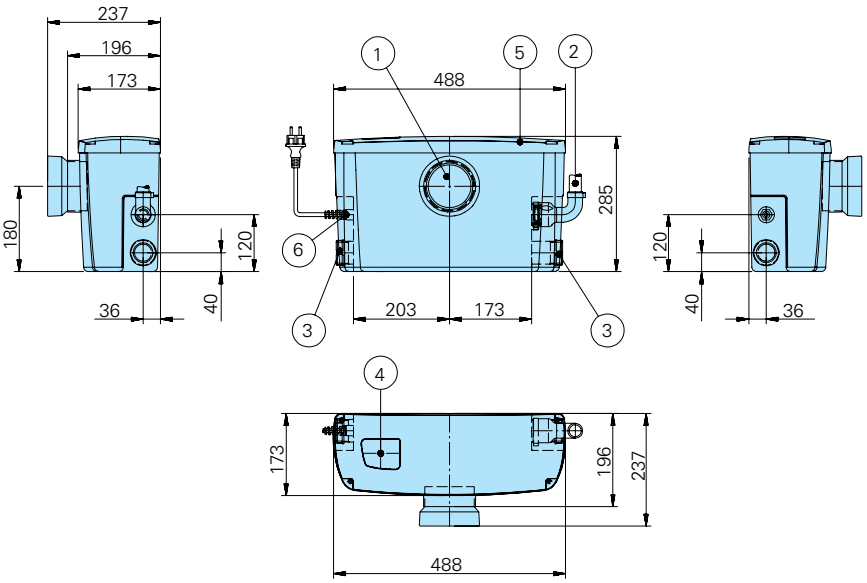

① Connection for universal flush WC, DIN 1387/1388
② Connection for discharge 25 mm dia.
③ Screw for inlet DN 40 (40 mm dia.)
④ Air vent with activated carbon filter
⑤ Tank cover, screwed
⑥ Cable inlet

all dimensions in mm.

HOMA PUMP TECHNOLOGY

HOMA Pumpenfabrik GmbH
P.O. Box 22 63, D-53814 Neunk.-Seelscheid
Tel. +49 (0) 22 47 / 702-0, Fax +49 (0) 22 47 / 702-44
e-mail: info@homa-pumpen.de
www.www.homapumps.com

3.0/1010 (ST) 001 jes / No. 0034022EN

We reserve the right to alter our specifications without notice

www.motralec.com / service-commercial@motralec.com / 01.39.97.65.10